

PRODUCT CATALOG

Cantrell Racing Products LLC.

CV

PROVEN MOTORSPORTS SUPPLIER FOR 28 YEARS

Designing, Engineering and Manufacturing technical components for the highest levels of racing in the world such as: Formula 1, IndyCar, NASCAR Sprint Cup, NASCAR Xfinity, NASCAR Camping World Truck, NHRA, Lucas Dirt Late Model Series, World of Outlaws, and for you!

CV Products is a privately held company with headquarters located in Thomasville, North Carolina. Clyde Vickers, a stock car driver, started purchasing and selling racing parts in High Point, North Carolina in 1988. For more than twenty five years, CV Products has been focused on supplying the racing industry with the best components across all forms of racing. Today, CV's focus is to be the #1 in engine racing products and manages multiple brands such as CV Racing Products, X2, Xceldyne, XTS, and other leading performance brands. Technical support capabilities that are available to our customers include AMC (Advanced Material Coatings) and Xceldyne Technologies divisions. CV Products strives to constantly introduce the latest technology to the racing industry through the development of the best engine components. We are dedicated to excellent, fast, dependable service and making customer satisfaction our #1 goal.



ASPHALT/OVAL DIRT TRACK
DRAG RACING ROAD RACING
& MORE

FOCUSED ON ENGINES

28 YEARS SUPPLYING RACING ENGINE COMPONENTS











1988

CV was established to supply high end racing components to the NASCAR Racing Series.

1996

Mooresville location was added to supply high end racing components to Charlotte and Concord Race Teams.

1997

CV expanded and moved to its current location, 42 High Tech Boulevard.

1999

MMT (Motorsports Machine Technologies) was formed at 42 High Tech Boulevard.

Manufacturing components for racing teams

2003

MMT acquired Xceldyne Engineering, relocated from California - Business name changed to Xceldyne Technol

Manufacturing expanded to Titanium and other specialty



TOP ENGINE BUILDERS RELY ON CV PRODUCTS

"WE DEPEND ON CV PRODUCTS AND XCELDYNE FOR ALL OF OUR VALVETRAIN NEEDS!"
- GM POWERTRAIN PERFORMANCE & RACING CENTER

"I CAN COUNT ON CV TO HELP ME WITH ALL MY ENGINE BUILDING NEEDS."
Andy Durham - DURHAM RACING ENGINES

"CV PRODUCTS CUSTOMER SERVICE & XCELDYNE VALVES ARE SUPERIOR IN QUALITY TO ANYTHING ELSE IN THE MARKET."
Brett Nesbitt - NESBITT PERFORMANCE ENGINES

"CV HAS HIGH QUALITY PARTS AT A FAIR PRICE WITH THE BEST SERVICE IN THE INDUSTRY."
Charlie & Robert Long - LONG BROTHERS RACING

"WE USE CV PARTS BASED ON THEIR EXCELLENT TRACK RECORD AND THE EXTENSIVE RESEARCH & DEVELOPMENT THEY DO TO PROVIDE CONSISTENT HIGH QUALITY PARTS THAT ARE CRITICAL TO THE PERFORMANCE OF OUR ENGINES."
Glen Clements - CLEMENTS AUTOMOTIVE

"CV SUPPLIES THE BEST HARDCORE RACING PARTS. AN EXAMPLE IS THEIR XCELDYNE VALVES WHICH ARE BY FAR THE BEST ON THE MARKET, NO OTHERS COMPARE!"
Gene Fulton - FULTON COMPETITION

"CV IS VERY COMMITTED TO PROVIDING PARTS THAT BOLT ON WITHOUT HAVING TO MAKE MODIFICATIONS WHILE WORKING AS INTENDED."
Scott Duggins - PAR RACE ENGINES

FOCUSED ON YOU

EXPERT ADVICE **CUSTOMER FOCUSED** **COMPETITIVE PRICING**











2006

AMC Coatings was formed. Offering Anodizing and Metal Finishing.

ISO9001 was achieved.

2008

XTS patented Thrust Bearing Assembly.

US Patent #7,331,319

2011 2012

2011 - ISO9001 was achieved for Xceldyne.

2012 - Xceldyne received AS9100C Certification.

2013

Cycra Racing Systems was acquired.

Expanded manufacturing into injection mold and thermoforming.

2015

AMC received NADCAP Certification.

CV PRODUCTS IS "FOCUSED ON ENGINES & FOCUSED ON YOU"



CV Products is "Focused on Engines & Focused on You". You may be wondering what exactly does this mean. It clearly means that if it goes in an engine or bolts on an engine then you can count on us to supply your needs, while providing only the best customer service in the industry. 2016 has been a throwback year in some regards; as the company's focus has returned to its heritage of supplying only the best in racing engine components.

I formed CV Products with the purpose of supplying the needs of racers with the priority on customer service. Today as we embark on our 28th year in business, the company is equipped with a staff that has over 1,000 combined years of experience in the motorsports industry serving engine builders and racers worldwide! With this level of experience; you can be confident in knowing that you can rely on the design, engineering, manufacturing, sales, marketing and the warehouse team to provide you with a product that is second to none.

I would like to thank you for your continued loyalty throughout the years!

Sincerely,

Clyde L. Vickers

Clyde Vickers
Founder



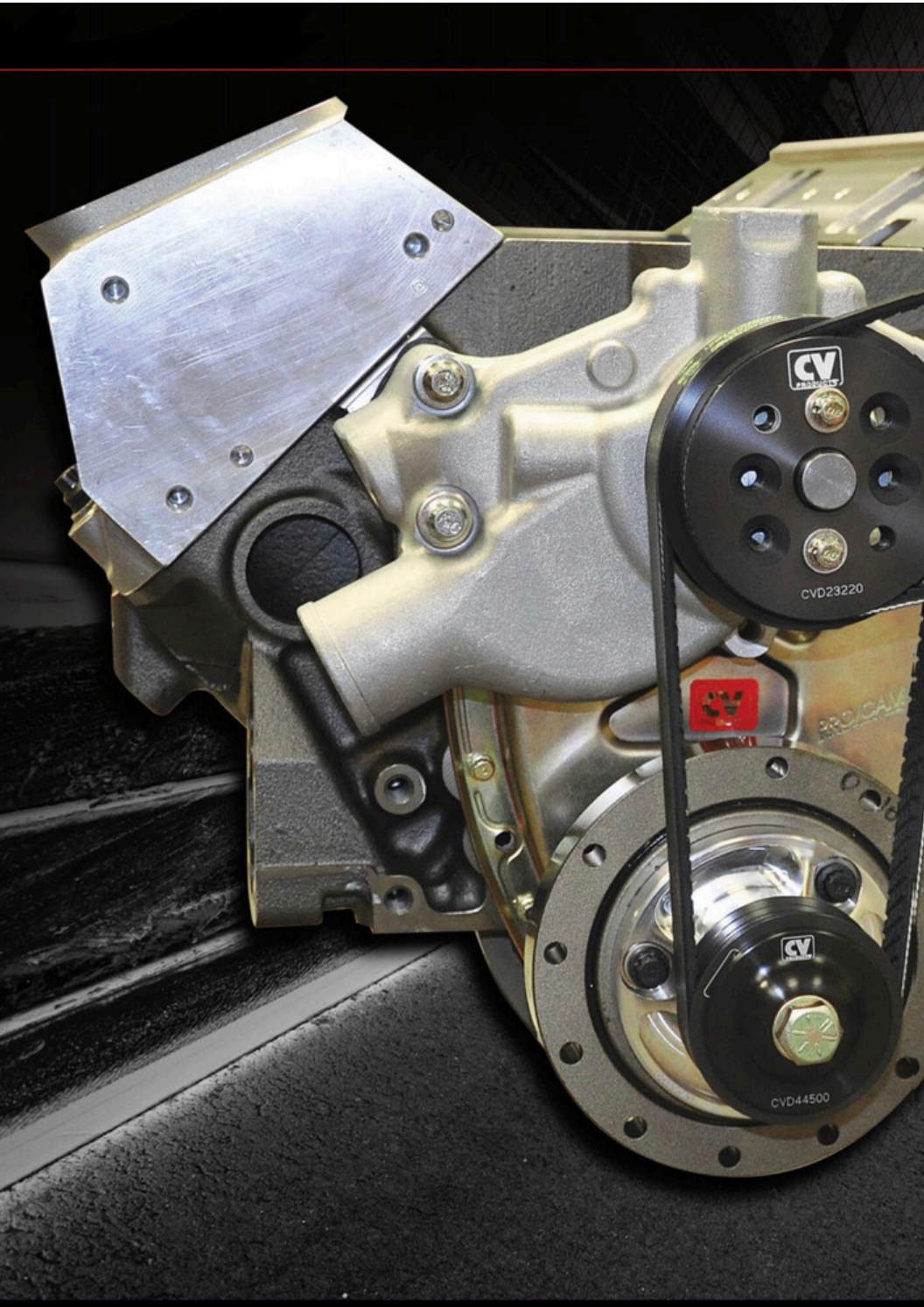
CVD23220
CVD44500



WE HAVE ALWAYS BEEN IN THE ACCESSORY DRIVE BELT BUSINESS

- CV pioneered the billet/hard coated pulley market for the NASCAR engines.
- The CV pulley became widely popular and were present on every engine in varying diameters.
- CV partnered with Goodyear on the development of engine drives that are stable beyond 10,000 RPM.
- The partnership resulted in sharing of information which lead to the CV pulleys and Continental belt becoming a matched set.
- This new technology was validated on our Spintron along with reports of increased engine power and off the corner performance enhancement demonstrating the level of quality that CV is known for in the Performance Racing Industry.
- Today, CV manufactures Serpentine and V-Belt pulleys and drives for dirt or asphalt oval track racers.
- Our mechanical fan drive is popular among the dirt market due to the power output and the hard coated 6061-T6 pulleys ability to handle the harsh conditions of the dirt track.

CVD93307 SERIES

SBC 5 RIB SERPENTINE DRIVE PULLEY KIT

CRATE ENGINE (LIMITED RPM) W/MECHANICAL FAN - 6.5% REDUCTION

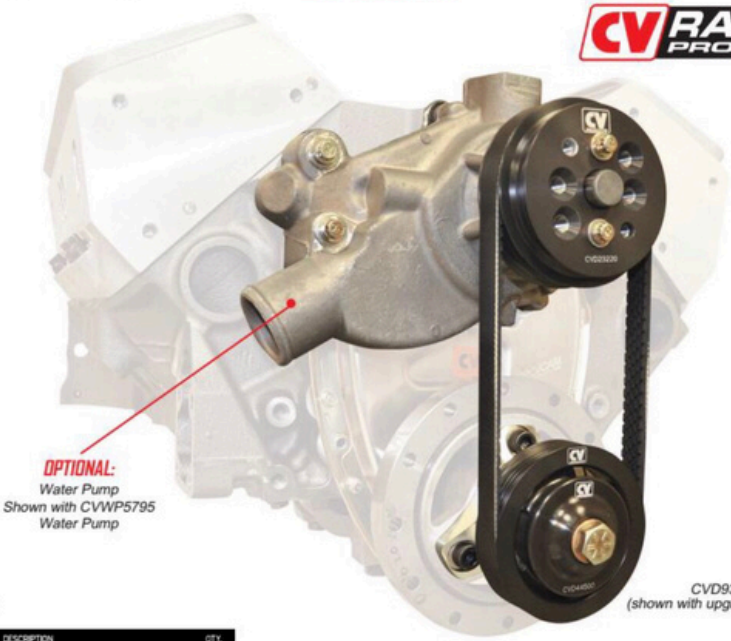

CVD93307 Kit
(shown with upgrade components)

CVD93307

PART #	DESCRIPTION	QTY.
CVD23220	Water Pump Pulley	1
CVD33308	Crank Pulley	1
CVD53420	SBC X-Light Drive Hub	1
CVD40208	Locator Tab	1
CVD44500	Hat Washer	1
CVD43220	Crank Hub Spacer .250" Thick	1
BLTCL	3/8" AN Washer	3
BLTEL	1/2" AN Washer Zinc Coated	1
BLTDL	7/16" AN Washer	1
BLTCC1.250A	3/8"-16 x 1-1/4" Allen Bolt	3
BLTDF2.250B	7/16"-20 x 2-1/4" 6pt.	1
BLTCF1.250C	3/8" x 1.25" Allen Bolt	3
BLTEF2.250B	1/2"-20 x 2-1/4" LG.	1
BLTEF1.750B	1/2"-20 x 1-3/4" LG.	1
4050253Y	NASCAR Serpentine Belt	1

CVD93307 KIT



CVD93307 is designed to meet the needs of SBC Crate engines or any SBC engine with a mechanical fan and remote power steering pump. This drive system works well with crate engines. SBC Crate engines prefer a water pump speed closer to crank speed. This drive has a 6.5% water pump speed reduction. All of our pulley drive kits are designed in conjunction with Continental engineers for minimal belt drag and the lightest weight for decreased rotating mass and maximum horsepower gains. All CV Racing Products' Drive Pulleys are hard coated for durability and extended service life in the harsh racing environment. The CVD93307 has a lower rotating inertia, is lighter weight than conventional V-Groove pulleys, and the drive has a self-cleaning design perfect for use in dirt applications. This drive is recommended for use with an adjustable water pump for belt tensioning. The basic kit CVD93307 comes with a water pump pulley, crank pulley, mounting bolts and a Continental Elite racing belt. As with all of our CVD Drive Kits, the CVD93307 is available in several configurations tailored to meet your individual needs. See the upgrade components listed below for additional ready to race components to fit your needs.

UPGRADE COMPONENTS

WATER PUMP COMPONENTS

PART #	DESCRIPTION	QTY.
CVWP5795	Water Pump	1

BELTS

PART #	DESCRIPTION	QTY.
4030280Y	NASCAR Serpentine 28.0" 3-Rib Belt	1

FUEL PUMP COMPONENTS

PART #	DESCRIPTION	QTY.
SPIN-MP-5048	-8IN, -8OUT	1

POWER STEERING COMPONENTS

PART #	DESCRIPTION	QTY.
CVD75305	3-Rib Power Steering Pulley 3.900"	1
CVD75000	P/S Pulley Hub Adapter	1
CV222-SBC-LTWV	SBC Lightweight Head Mount	1
CV222-NUT	P/S Bracket Adjusting Nut	1
CV4250	Power Steering Reservoir Kit	1
SPIN-PS-231NP	Short Track Pump	1
EXT4251	Xtreme Synthetic P/S Fluid 1qt.	1
CV22223-8	1.330 x .392" x .742" Spacers	3

CVD93306 SERIES

SBC 5 RIB SERPENTINE DRIVE PULLEY KIT

BUILT OR CRATE ENGINE (LIMITED RPM) W/MECHANICAL FAN - 28.5% REDUCTION

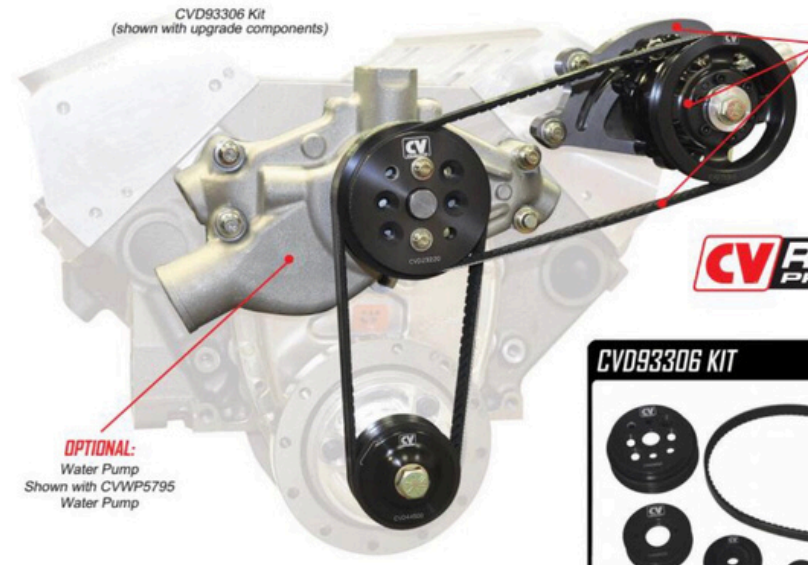

CV RACING PRODUCTS



CVD93306

PART #	DESCRIPTION	QTY.
CVD23220	Water Pump Pulley	1
CVD33220	Crank Pulley	1
CVD53320	SBC Pro Drive Hub	1
CVD40208	Locator Tab 7/16" Hole	1
CVD44500	Hat Washer	1
CVD43220	Crank Hub Spacer .250" Thick	1
BLTCL	3/8" AN Washer	3
BLTEL	1/2" AN Washer Zinc Coated	2
BLTDL	7/16 AN Washer	1
BLTEF2.250B	1/2"-20 x 2-1/4" LG.	1
BLTCC1.250A	3/8"-16 x 1-1/4" Allen Bolt	3
BLTCF1.250C	3/8"-24 x 1-1/4" Allen Bolt	3
BLTEF1.750B	1/2"-20 x 1-3/4" LG.	1
BLTDF2.250B	7/16"-20 x 2-1/4" 6pt.	1
BLTCF1.250A	Sub for (3) BLTCF1.250C	3
4050239Y	NASCAR Serpentine Belt	1

CVD96306* (Basic Kit)

SBC 5-RIB CRANK W/P DRIVE, P/S FAN DRIVE KIT - 28.5% W/P REDUCTION		
PART #	DESCRIPTION	QTY.
CVD23220	Water Pump Pulley	1
CVD33220	Crankshaft Pulley	1
CVD53320	SBC Pro Drive Hub	1
CVD45232	Locator Tab 7/16" Hole	1
CVD44500	Hat Washer	1
CVD43220	Crank Hub Spacer .250" Thick	1
4050239Y	NASCAR Poly V-Belt	1

*NOTE: Kit excludes: P/S Pulley & Hardware.

Designed to meet the needs of limited RPM Late Model dirt engines or any SBC engine with a mechanical fan and remote power steering pump. This setup uses Continental belts that replace the conventional V-Belt dirt drive system. All of our pulley drive kits are designed in conjunction with Continental engineers for minimal belt drag and the lightest weight for decreased rotating mass and maximum horsepower gains. All CV Racing Products' Drive Pulleys are hard coated for durability and extended service life in the harsh racing environment. The basic kit CVD93306 comes with a water pump pulley, crank pulley, mounting bolts and a Continental Elite racing belt. As with all of our CVD Drive Kits, the CVD93306 is available in several configurations tailored to meet your individual needs. See the upgrade components listed below for additional ready to race components to fit your needs. This kit has a 28.5% water pump reduction ratio.

UPGRADE COMPONENTS

WATER PUMP COMPONENTS		
PART #	DESCRIPTION	QTY.
CVWP5795	Water Pump	1

BELTS		
PART #	DESCRIPTION	QTY.
4030280Y	NASCAR Serpentine 28.0" 3-Rib Belt	1

FUEL PUMP COMPONENTS		
PART #	DESCRIPTION	QTY.
SPIN-MP-5048	-8IN, -8OUT	1

POWER STEERING COMPONENTS		
PART #	DESCRIPTION	QTY.
CVD75305	3-Rib Power Steering Pulley 3.900"	1
CVD75000	P/S Pulley Hub Adapter	1
CV222-SBC-LTW	SBC Lightweight Head Mount	1
CV222-NUT	P/S Bracket Adjusting Nut	1
SPIN-PS-231NP	Short Track Pump	1
CV4250	Power Steering Reservoir Kit	1
EXT4251	Xtreme Synthetic P/S Fluid 1qt.	1

CVD97210 SERIES

SBC 6 Rib Serpentine Drive Pulley Kit
Built or Crate Engine 10% Reduction

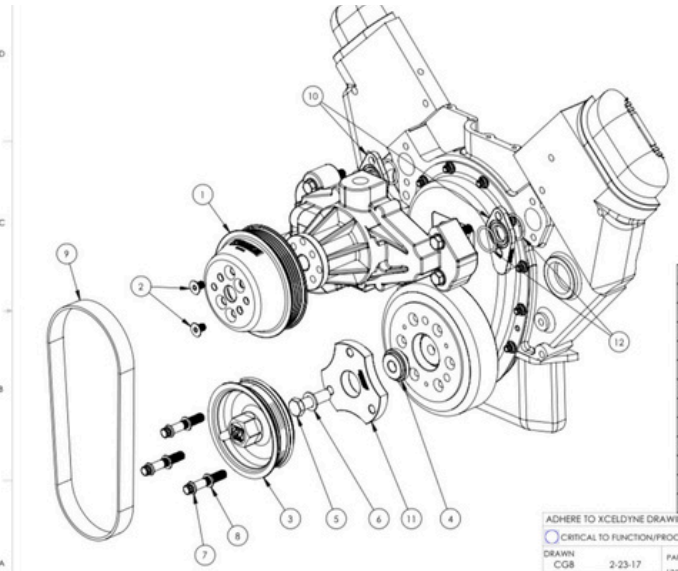

ITEM NO.	PART NUMBER	DESCRIPTION	QTY.
1	CVD23321	SBC WATER PUMP PULLEY	1
2	BLTBF.500E	5/16-24x1/2" FHSC	2
3	CVD33320	6" SIX RIB CRANK PULLEY / HUB	1
4	CVD45231	DRIVE ADAPTER	1
5	BLTEF1.750B	1/2-20 X 1.750, HEX BOLT	1
6	BLTEL	1/2 AN WASHER	1
7	BLTCC2.000A	3/8-16X2" 12 PT BOLT	3
8	BLTCL	3/8 AN WASHER	3
9	GY4060281Y	6 RIB 28.1" BELT	1
10	CV739-2	WITH O-RING GROOVE	2
11	CVD40219	1/2" SPACER	1
12	5308T179	AS568-121 VITON O-RING	4

ADHERE TO XCELDYNE DRAWING INTERPRETATION SPEC #100-0217
CRITICAL TO FUNCTION/PROCESS REFER TO DIMENSIONAL CONTROL PROCESS

DRAWN CGB 2-23-17
SURFACE AREA: N/A
MASS: N/A
MATERIAL: N/A
FINISH:

PARTS TO BE FREE OF BURRS.
UNLESS OTHERWISE SPECIFIED: BREAK ALL SHARP EDGES TO ANY FORM DESIGNATED BY SHADED REGION
UNLESS OTHERWISE SPECIFIED DIMENSIONS ARE IN INCHES
TOLERANCES ARE: MACHINED ANGLES ±0.5°

TOL. TABLE ±
.XX .01
.XXX .005
.XXXX .0005

CAD GENERATED DRAWING. DO NOT MANUALLY UPDATE

Cantrell Racing Products LLC.

6 RIB 10% UNDERDRIVE
SBC CREATE BELT DRIVE

SIZE B DWG. NO. CVD97210 REV. A
SCALE 1:4 DO NOT SCALE DRAWING SHEET 1 OF 1

CVD93308 SERIES

SBC 6 RIB SERPENTINE DRIVE PULLEY KIT

BUILT OR CRATE ENGINE - 18% REDUCTION

(Kit designed for use with a crank trigger. For use w/o cranktrigger, use CVD40215 Crank pulley Spacer.)

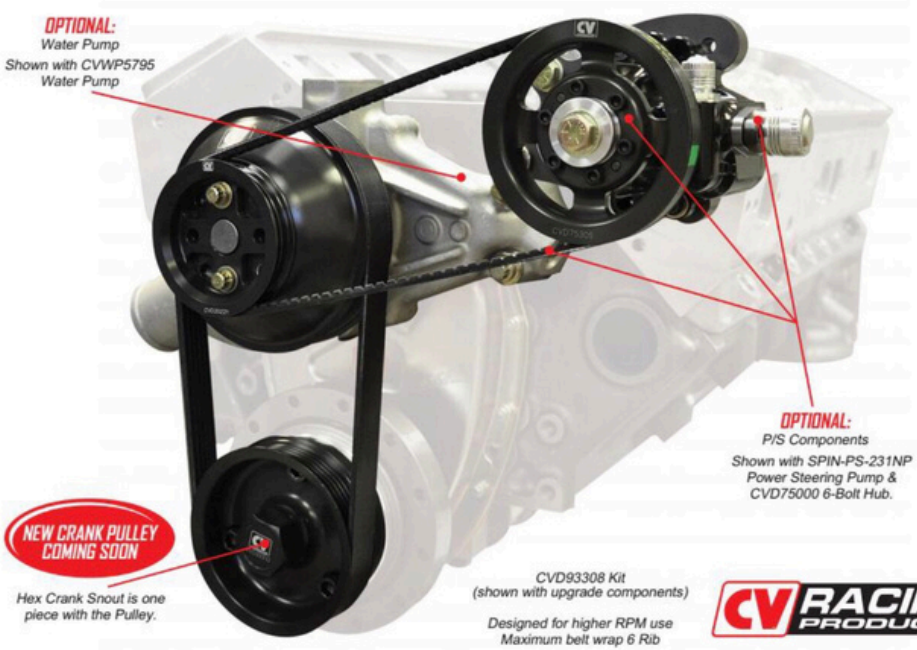

CV RACING PRODUCTS

CVD93308 KIT



CVD93308

PART #	DESCRIPTION	QTY.
CVD23310	6-Rib Water Pump Pulley	1
CVD33310*	6-Rib Crank Pulley	1
CVD40208	Locator Tab	1
BLTCL	3/8" AN Washer	3
BLTDL	7/16" AN Washer	1
BLTBL	5/16" AN Washer	4
BLTDF2.250B	7/16"-20 x 2-1/4" 6pt.	1
BLTCC2.250C	3/8" x 2.25" Allen Bolt	3
BLTBF.750A	5/16"-24 x 3/4" 12pt.	4
4060285DY	NASCAR Serpentine Belt 6 RIB	1

**NOTE: NEW Crank Pulley Coming Soon*

Designed to meet the needs of high RPM Late Model dirt engines with a mechanical fan. High RPM race engines that require a mechanical fan for cooling require a 6 rib serpentine belt. The water pump speed is increased over the CVD93306 drive as these 800+ HP engines cool better with increased water pressure from the pump. This drive was designed for crank triggers that use a .250" thick wheel (see note above). The effective six rib configuration provides maximum belt wrap to eliminate slippage of the fan drive pulley and promote efficient cooling. An adjustable water pump is recommended although not a necessity. The basic kit CVD93308 comes with a water pump pulley, crank pulley, mounting bolts and Continental Elite racing belt. See the upgrade components listed below for additional ready to use components to fit your needs.

UPGRADE COMPONENTS

WATER PUMP COMPONENTS

PART #	DESCRIPTION	QTY.
CVWP5795	Water Pump	1

BELTS

PART #	DESCRIPTION	QTY.
4030260Y	NASCAR Serpentine 26.0" 3-Rib Belt	1

FUEL PUMP COMPONENTS

PART #	DESCRIPTION	QTY.
SPIN-MP-5048	-8IN, -8OUT	1

POWER STEERING COMPONENTS

PART #	DESCRIPTION	QTY.
CVD20304	P/S Drive Pulley	1
CV22224-18	1.820" x .392" x .742" Spacers	3
CVD75305	3-Rib Power Steering Pulley 3.900"	1
CVD75000	P/S Pulley Hub Adapter	1
CV222-SBC-LTWV	SBC Lightweight Head Mount	1
CV222-NUT	P/S Bracket Adjusting Nut	1
CV4250	Power Steering Reservoir Kit	1
SPIN-PS-231NP	Short Track Pump	1
EXT4251	Xtreme Synthetic P/S Fluid 1qt.	1

CVD93220 SERIES

SBC LATE MODEL, LATE MODEL STOCK SERPENTINE DRIVE PULLEY KIT

BUILT OR CRATE ENGINE, HEAD MOUNT P/S - 28.5% REDUCTION

(NOT RECOMMENDED FOR MECHANICAL FANS)

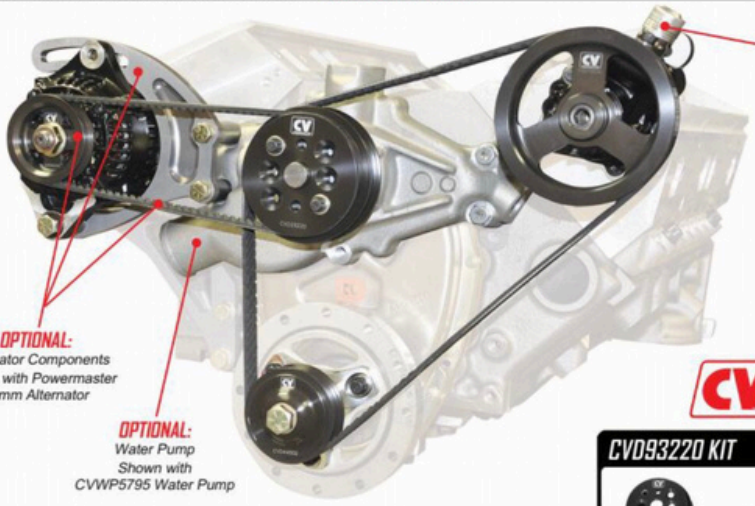

OPTIONAL:
P/S Components
Kit has Power Steering Pulley Only

OPTIONAL:
Alternator Components
Shown with Powermaster 93mm Alternator

OPTIONAL:
Water Pump
Shown with
CVWP5795 Water Pump

CVD93220 Kit
(shown with upgrade components)

CVD93220 KIT



CVD93220

PART #	DESCRIPTION	QTY.
CVD23220	Water Pump Pulley	1
CVD33220	Crank Pulley	1
CVD53420	X-Light SBC Drive Hub	1
CVD43220	Crank Hub Spacer	1
CVD73220	Power Steering Pulley	1
CVD40208	Locator Tab	1
CVD44500	Hat Washer	1
BLTCL	3/8" AN Washer	3
BLTEL	1/2" AN Washer	1
BLTBL	5/16" AN Washer	4
BLTDL	7/16" AN Washer	1
BLTEF1.750B	1/2"-20 x 1-3/4" LG.	1
BLTEF2.250B	1/2"-20 x 2-1/4" LG.	1
BLTCC1.250A	3/8"-16 x 1-1/4" Aleen Bolt	3
BLTBF.750A	5/16"-24 x 3/4" 12pt.	4
BLTCF1.250A	3/8"-24 x 1.250" 12pt.	3
BLTDF2.250B	7/16"-20 x 2-1/4" 6pt.	1
4050385Y	NASCAR Serpentine Belt	1

CVD96220* (Basic Kit)

SBC 5-RIB CRANK W/P KIT - 30% W/P REDUCTION

PART #	DESCRIPTION	QTY.
CVD23220	Water Pump Pulley	1
CVD33220	Crankshaft Pulley	1
CVD53440	X-Tra Light Drive Hub	1
CVD44500	Hat Washer	1
CVD40208	Locator Tab 7/16" Hole	1
4050385	Serpentine Belt 38.5"	1

**NOTE: Kit excludes: P/S Pulley & Hardware. Includes different Drive Hub & Basic Belt.*

CV Racing Products' CVD93220 Serpentine Drive Pulley Kit comes in several configurations to fit every racers needs, whether you only need the basic pulley kit or everything from the engine block forward. The basic kit CVD93220 comes with the water pump pulley, crank pulley, power steering pulley, crank hub, mounting hardware and Continental Elite racing belt. All of our pulley drive kits are designed in conjunction with Continental engineers for minimal belt drag and the lightest weight for decreased rotating mass and maximum horsepower gains. All CV Racing Products' Drive Pulleys are hard coated for durability while extending service life in the harsh racing environment. This kit has a 28.5% water pump reduction ratio. See the upgrade components listed below for additional ready to race components to fit your needs.

UPGRADE COMPONENTS

WATER PUMP COMPONENTS

PART #	DESCRIPTION	QTY.
CVWP5795	Water Pump	1

ALTERNATOR COMPONENTS

PART #	DESCRIPTION	QTY.
PM8162	50A Alternator	1
PM8182	75A Alternator	1
CV32200	93mm SBC Alternator Mount Kit	1
CVD60220	Denso 3-Rib 2.700" Pulley 32% Reduction	1

BELTS

PART #	DESCRIPTION	QTY.
4030250Y	NASCAR Serpentine 25.0" 3-Rib Belt	1

POWER STEERING COMPONENTS

PART #	DESCRIPTION	QTY.
CV222-SBC-LTW	SBC Lightweight Head Mount	1
CV222-NUT	P/S Bracket Adjusting Nut	1
CV32200-3	P/S Mount Spacer .750"/.392" ID/.742" OD	3
CV4250	Power Steering Reservoir Kit	1
SPIN-PS-231NP	Short Track Pump	1
EXT4251	Xtreme Synthetic P/S Fluid 1qt.	1

FUEL PUMP COMPONENTS

PART #	DESCRIPTION	QTY.
SPIN-MP-5048	-8IN, -8OUT	1

CVD93221 SERIES

SBC LATE MODEL, LATE MODEL STOCK SERPENTINE DRIVE PULLEY KIT

BUILT OR CRATE ENGINE, LOW BLOCK MOUNT P/S- 28.5% REDUCTION

(NOT RECOMMENDED FOR MECHANICAL FANS)

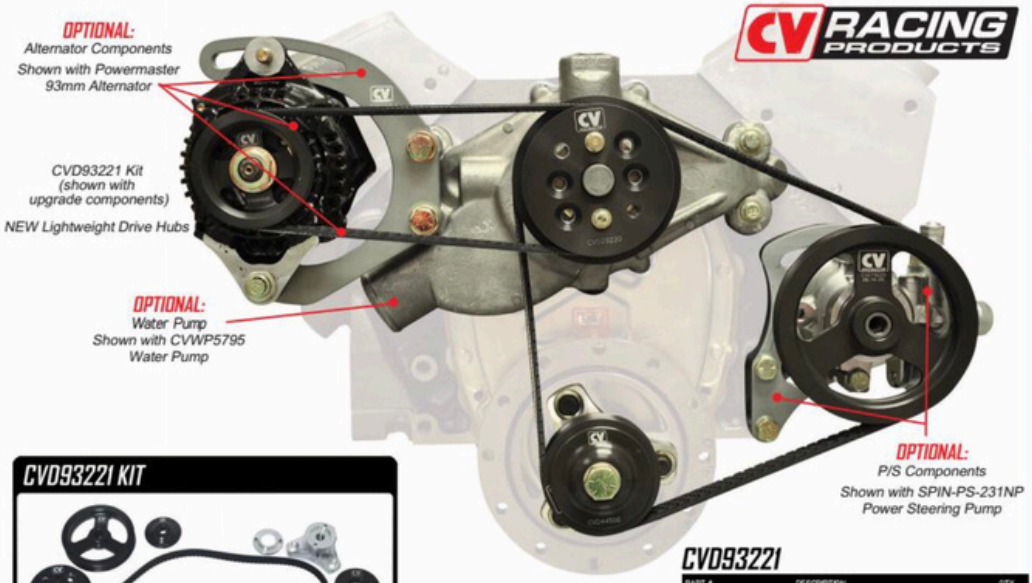

CVD93221 KIT



CVD96221* (Basic Kit)

SBC 5-RIB CRANK W/P KIT - 30% W/P REDUCTION

PART #	DESCRIPTION	QTY.
CVD23220	Water Pump Pulley	1
CVD33220	Crankshaft Pulley	1
CVD53440	X-Tra Light Drive Hub	1
CVD44500	Hat Washer	1
CVD40208	Locator Tab 7/16" Hole	1
4050335	Serpentine Belt 33.5"	1

**NOTE: Kit excludes: P/S Pulley & Hardware. Includes different Drive Hub & Basic Belt.*

CVD93221

PART #	DESCRIPTION	QTY.
CVD23220	Water Pump Pulley	1
CVD33220	Crank Pulley	1
CVD53420	SBC X-Light Drive Hub	1
CVD43220	Crank Hub Spacer	1
CVD73220	Power Steering Pulley	1
CVD44500	Hat Washer	1
CVD40208	Locator Tab 7/16" Hole	1
BLTCL	3/8" AN Washer	3
BLTEL	1/2" AN Washer	1
BLTBL	5/16" AN Washer	4
BLTDL	7/16" AN Washer	1
BLTEF1.750B	1/2"-20 x 1-3/4" LG.	1
BLTEF2.250B	1/2"-20 x 2-1/4" LG.	1
BLTCC1.250A	3/8"-16 x 1-1/4" Allen Bolt	3
BLTBF.750A	5/16"-24 x 3/4" 12pt.	4
BLTCF1.250C	3/8" x 1.25" Allen Bolt	3
BLTDF2.250B	7/16"-20 x 2-1/4" 6pt.	1
4050335Y	NASCAR Serpentine Belt	1

CV Racing Products' CVD93221 Serpentine Drive Pulley Kit comes in several configurations to fit every racers needs, whether you only need the basic pulley kit or everything from the engine block forward. The basic kit CVD93221 comes with the water pump pulley, crank pulley, power steering pulley, crank hub, mounting hardware and Continental Elite racing belt. All of our pulley drive kits are designed in conjunction with Continental engineers for minimal belt drag and the lightest weight for decreased rotating mass and maximum horsepower gains. All CV Racing Products' Drive Pulleys are hard coated for durability while extending service life in the harsh racing environment. This kit has a 28.5% water pump reduction ratio. See the upgrade components listed below for additional ready to race components to fit your needs.

UPGRADE COMPONENTS

WATER PUMP COMPONENTS

PART #	DESCRIPTION	QTY.
CVWP5795	Water Pump	1

ALTERNATOR COMPONENTS

PART #	DESCRIPTION	QTY.
PM8162	50A Alternator	1
PM8182	75A Alternator	1
CV32200	93mm SBC Alternator Mount Kit	1
CVD60220	Denso 3-Rib 2.700" Pulley 32% Reduction	1

BELTS

PART #	DESCRIPTION	QTY.
4030250Y	NASCAR Serpentine 25.0" 3-Rib Belt	1

POWER STEERING COMPONENTS

PART #	DESCRIPTION	QTY.
CVD73220	5-Rib Power Steering Pulley	1
CV3224	SBC Low Mount P/S Kit	1
CV4250	Power Steering Reservoir Kit	1
SPIN-PS-231NP	Short Track Pump	1
EXT4251	Xtreme Synthetic P/S Fluid 1qt.	1

FUEL PUMP COMPONENTS

PART #	DESCRIPTION	QTY.
SPIN-MP-5048	-8IN, -8OUT	1

CVD93222 SERIES

SBF 351 SERPENTINE DRIVE PULLEY KIT

HEAD MOUNT P/S 9.200" - 9.500" DECK - 28.5% REDUCTION

(NOT RECOMMENDED FOR MECHANICAL FANS)

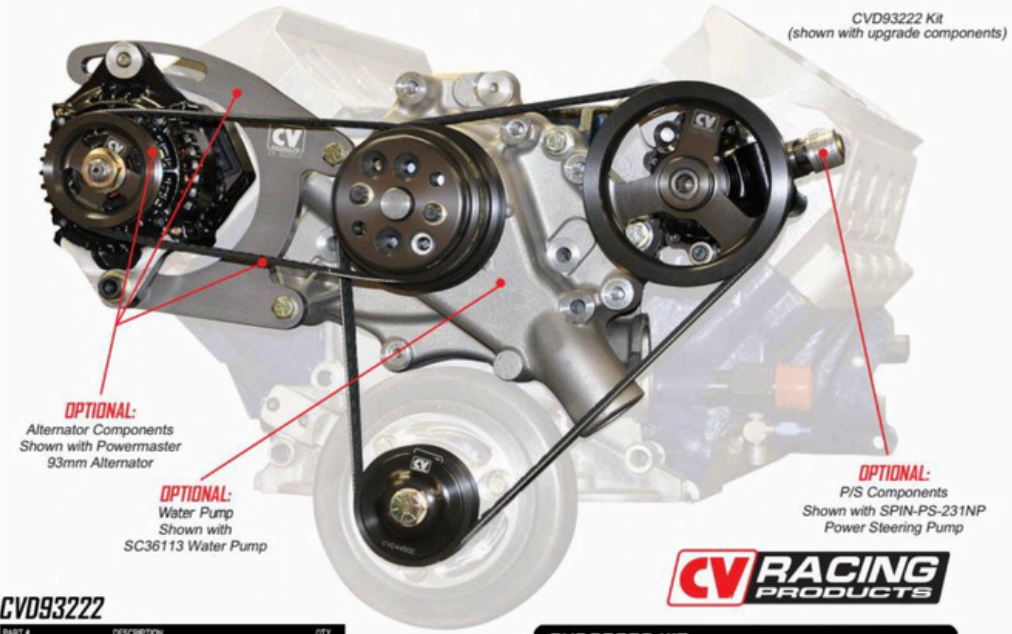

CVD93222

PART #	DESCRIPTION	QTY.
CVD23224	Water Pump Pulley	1
CVD33220	Crank Pulley	1
CVD53324	SBF Pro Drive Hub	1
CVD40500	Adaptor Bushing	1
CVD50224	Balancer Washer SBF	1
CVD73220	Power Steering Pulley	1
CVD44500	Hat Washer	1
BLTGL	BLTGL 5/8" AN Washer	1
BLTEL	1/2" AN Washer	1
BLTBL	5/16" AN Washer	4
BLTBF.750A	5/16"-24 x 3/4" 12pt.	4
BLTEF2.000B	1/2"-20 x 2.000" 6 PT Bolt Crank	1
BLTGF2.000B	5/8"-18 x 2.000" 6 PT Bolt	1
4050355Y	NASCAR Serpentine Belt	1

CVD93222 KIT



CV Racing Products' CVD93222 Serpentine Drive Pulley Kit comes in several configurations to fit every racers needs, whether you only need the basic pulley kit or everything from the engine block forward. The basic kit CVD93222 comes with the water pump pulley, crank pulley, power steering pulley, crank hub, mounting hardware and Continental Elite racing belt. All of our pulley drive kits are designed in conjunction with Continental engineers for minimal belt drag and the lightest weight for decreased rotating mass and maximum horsepower gains. All CV Racing Products' Drive Pulleys are hard coated for durability while extending service life in the harsh racing environment. This kit has a 28.5% water pump reduction ratio. See the upgrade components listed below for additional ready to race components to fit your needs.

UPGRADE COMPONENTS

WATER PUMP COMPONENTS

PART #	DESCRIPTION	QTY.
SC36113	Water Pump	1

ALTERNATOR COMPONENTS

PART #	DESCRIPTION	QTY.
PM8162	50A Alternator	1
PM8182	75A Alternator	1
CV32201	93mm SBF Alternator Mount Kit	1
CVD60220	Denso 3-Rib 2.700" Pulley	1

BELTS

PART #	DESCRIPTION	QTY.
4030240Y	NASCAR Serpentine 24.0" 3-Rib Belt	1

POWER STEERING COMPONENTS

PART #	DESCRIPTION	QTY.
CV4250	Power Steering Reservoir Kit	1
SPIN-PS-231NP	Short Track Pump	1
EXT4251	Xtreme Synthetic P/S Fluid 1qt.	1

FUEL PUMP COMPONENTS

PART #	DESCRIPTION	QTY.
SPIN-MP-5218	-8IN, -8OUT	1

CVD93228 SERIES

SBF D347SR OR S347JR LATE MODEL, LATE MODEL STOCK SERPENTINE DRIVE PULLEY KIT

CRATE ENGINE - 28.5% REDUCTION

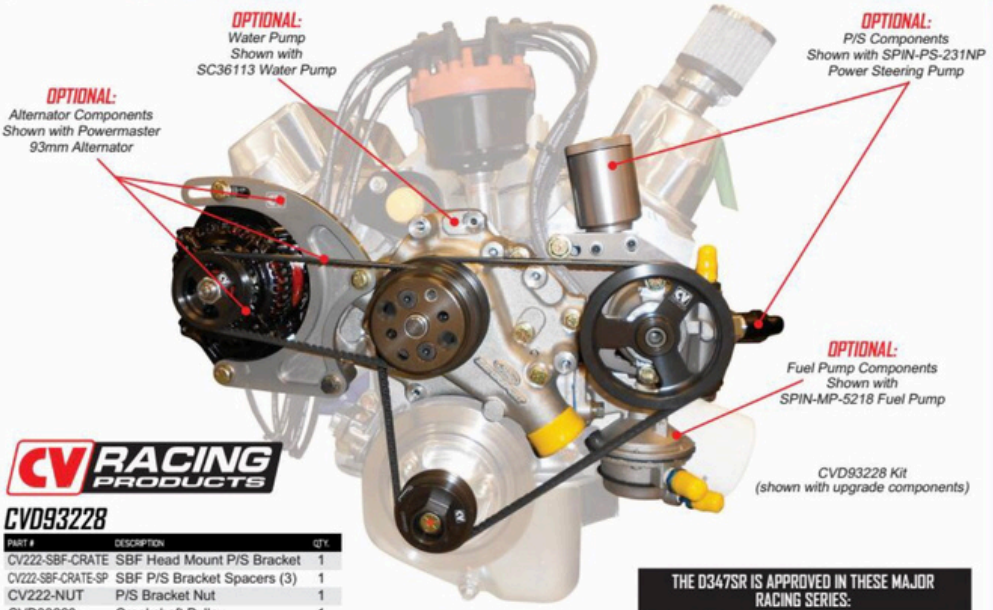

CVD93228

PART #	DESCRIPTION	QTY.
CV222-SBF-CRATE	SBF Head Mount P/S Bracket	1
CV222-SBF-CRATE-SP	SBF P/S Bracket Spacers (3)	1
CV222-NUT	P/S Bracket Nut	1
CVD33220	Crankshaft Pulley	1
CVD23226	Water Pump Pulley	1
CVD40500	Adaptor Bushing For Water Pump	1
CVD44501	Hex Head Hat Washer	1
CVD53324	SBF Pro Drive Hub	1
CVD73220	Power Steering Pulley	1
4050355Y	NASCAR Serpentine Belt	1
BLTDC3.750B	7/16"-14 x 3.750" Hex Bolt	1
BLTDC3.250B	7/16"-14 x 3.250" Hex Bolt	2
BLTCC1.250C	3/8" x 1.25" Allen Bolt	3
BLTEF2.250B	1/2"-20 x 2-1/4" LG.	1
BLTDL	7/16" AN Washer	3
BLTCL	3/8" AN Washer	3
BLTEL	1/2" AN Washer	1

THE D347SR IS APPROVED IN THESE MAJOR RACING SERIES:

- ASA Late Model Series
- ASA Southeast Tour
- CRA
- SUPERPRO Late Model Series
- GAS - Georgia Asphalt Series
- FASCAR

FEATURES

- True bolt on kit (allowing reduced build time)
- NASCAR Proven design, manfacturing methods & durability from the company with a solid track record
- Hard anodized billet aluminum pulleys for extended service life
- Proven serpentine technology that will last the race season
- Pulleys designed for proper speeds allowing optimal size & weight

CVD96228* (Basic Kit)

SBC SERPENTINE DRIVE PULLEY KIT - 28 % W/P REDUCTION

PART #	DESCRIPTION	QTY.
CVD73220	Power Steering Pulley	1
CVD23226	Water Pump Pulley	1
CVD33220	Crankshaft Pulley	1
CVD44501	Hex Head Hat Washer	1
CVD53324	SBF Pro Drive Hub	1
4050355Y	NASCAR Serpentine Belt	1

*NOTE: Kit excludes: PS Mount Bracket Kit & Hardware.

UPGRADE COMPONENTS

WATER PUMP COMPONENTS

PART #	DESCRIPTION	QTY.
SC36113	Water Pump	1

ALTERNATOR COMPONENTS

PART #	DESCRIPTION	QTY.
PM8162	50A Alternator	1
PM8182	75A Alternator	1
CV32201	93mm SBF Alternator Mount Kit	1
CVD60220	Denso 3-Rib 2.700" Pulley	1

BELTS

PART #	DESCRIPTION	QTY.
4030240Y	NASCAR Serpentine 24.0" 3-Rib Belt	1

POWER STEERING COMPONENTS

PART #	DESCRIPTION	QTY.
CV4250-1	Power Steering Mounting Body	1
CV4250-5	Power Steering Reservoir Tank 4"	1
CV4250-9	Power Steering Cap/Vented	1
SPIN-PS-231NP	Short Track Pump	1
EXT4251	Xtreme Synthetic P/S Fluid 1qt.	1

FUEL PUMP COMPONENTS

PART #	DESCRIPTION	QTY.
SPIN-MP-5218	-8IN, -8OUT	1

CVD93229 SERIES

SBF D347SR OR S347JR LATE MODEL, LATE MODEL STOCK SERPENTINE DRIVE PULLEY KIT

CRATE ENGINE - 28.5% REDUCTION

CVD93229

PART #	DESCRIPTION	QTY.
CV222-SBF-CRATE	SBF Head Mount P/S Bracket	1
CV222-SBF-CRATE-SP	SBF P/S Bracket Spacers (3)	1
CV222-NUT	P/S Bracket Nut	1
CVD33220	Crankshaft Pulley	1
CVD23229	Water Pump Pulley	1
CVD40500	Adaptor Bushing For Water Pump	1
CV22100	SBF Water Pump Back Plate	1
CVD44501	Hex Head Hat Washer	1
CVD53324	SBF Pro Drive Hub	1
CVD73220	Power Steering Pulley	1
4050355Y	NASCAR Serpentine Belt	1
BLTDC3.750B	7/16"-14 x 3.750" Hex Bolt	1
BLTDC3.250B	7/16"-14 x 3.250" Hex Bolt	2
BLTCC1.250C	3/8" x 1.25" Allen Bolt	3
BLTEF2.250B	1/2"-20 x 2-1/4" LG.	1
BLTDL	7/16" AN Washer	3
BLTCL	3/8" AN Washer	3
BLTEL	1/2" AN Washer	1

THE D347SR IS APPROVED IN THESE MAJOR RACING SERIES:

- ASA Late Model Series
- ASA Southeast Tour
- CRA
- SUPERPRO Late Model Series
- GAS - Georgia Asphalt Series
- FASCAR



CVD23229
Water Pump Pulley



CV22100
Water Pump Back Plate

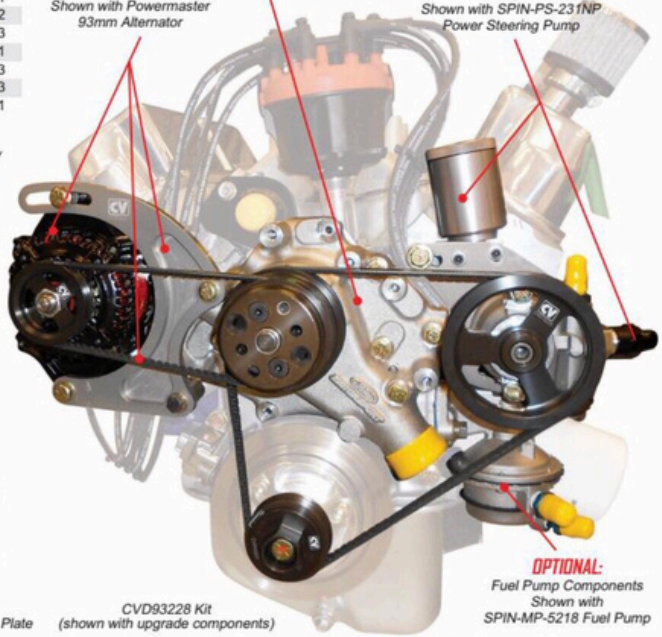

OPTIONAL:
Water Pump
Shown with SC36113
Water Pump

OPTIONAL:
Alternator Components
Shown with Powermaster
93mm Alternator

OPTIONAL:
P/S Components
Shown with SPIN-PS-231NP
Power Steering Pump

OPTIONAL:
Fuel Pump Components
Shown with
SPIN-MP-5218 Fuel Pump

CVD93228 Kit
(shown with upgrade components)

Engine builders have known for some time that excessive water pressures in Ford engines can cause water leaks behind the water pump. These pressures are caused by high pressure radiator caps and/or by spinning the water pump too fast. The thin metal plate behind the pump was never designed to handle these 30 + psi pressures. CV Products has created a ¼" aluminum plate to replace the thin steel plate on the rear of the pump. The plate resolves the water leak problem, but introduces a belt offset issue for the power steering pulley. This has been addressed by producing a new water pump pulley that compensates for the water pump being moved out ¼". You can see the new part numbers in the bill of materials listing. The alternator drive does not have the same issue as the alternator bracket mounts to the water pump therefore the belt alignment remains unchanged.

NOTE: If the ¼" water pump plate is desired on a CVD93228 drive kit remember to also add the CVD23229 water pump pulley to your order.

UPGRADE COMPONENTS

WATER PUMP COMPONENTS

PART #	DESCRIPTION	QTY.
SC36113	Water Pump	1

ALTERNATOR COMPONENTS

PART #	DESCRIPTION	QTY.
PM8162	50A Alternator	1
PM8182	75A Alternator	1
CV32201	93mm SBF Alternator Mount Kit	1
CVD60220	Denso 3-Rib 2.700" Pulley	1

BELTS

PART #	DESCRIPTION	QTY.
4030240Y	NASCAR Serpentine 24.0" 3-Rib Belt	1

POWER STEERING COMPONENTS

PART #	DESCRIPTION	QTY.
CV4250-1	Power Steering Mounting Body	1
CV4250-5	Power Steering Reservoir Tank 4"	1
CV4250-9	Power Steering Cap/Vented	1
SPIN-PS-231NP	Short Track Pump	1
EXT4251	Xtreme Synthetic P/S Fluid 1qt.	1

FUEL PUMP COMPONENTS

PART #	DESCRIPTION	QTY.
SPIN-MP-5218	-8IN, -8OUT	1

CVD93230 SERIES

SBC LATE MODEL, LATE MODEL STOCK SERPENTINE DRIVE PULLEY KIT

603 & 604 CRATE ENGINES, HEAD MOUNT P/S - 6% REDUCTION

(NOT RECOMMENDED FOR MECHANICAL FANS)

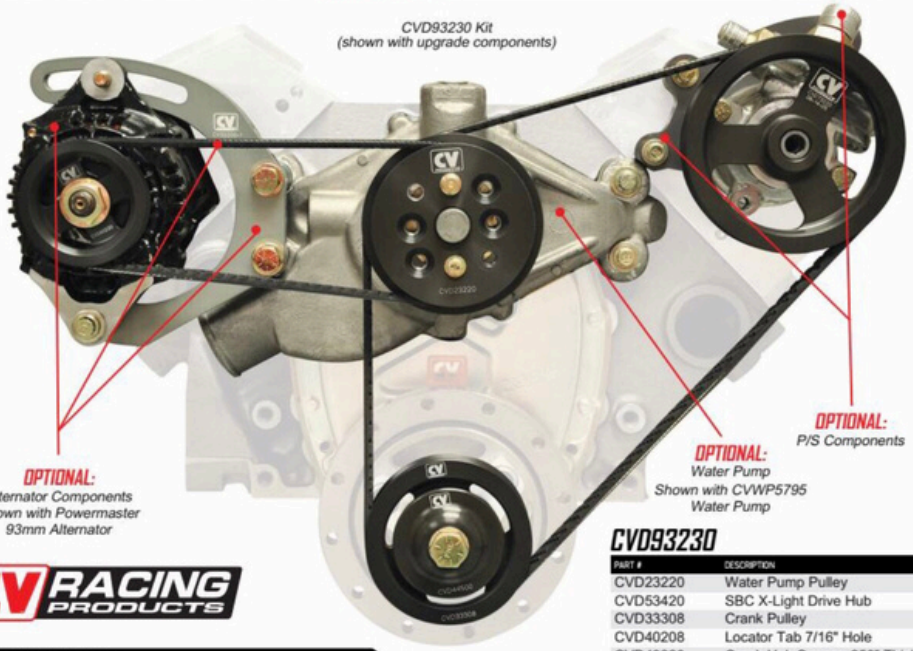

CV RACING PRODUCTS

CVD93230 KIT



CVD93230

PART #	DESCRIPTION	QTY.
CVD23220	Water Pump Pulley	1
CVD53420	SBC X-Light Drive Hub	1
CVD33308	Crank Pulley	1
CVD40208	Locator Tab 7/16" Hole	1
CVD43220	Crank Hub Spacer .250" Thick	2
CVD44500	Hat Washer	1
CVD73220	Power Steering Pulley	1
CVWP11739	SBC W/P O-Ring Spacers	1
BLTBL	5/16" AN Washer	4
BLTCL	3/8" AN Washer	3
BLTEL	1/2" AN Washer Zinc Coated	1
BLTDL	7/16" AN Washer	1
BLTBF.750A	5/16"-24 x 3/4" 12pt.	4
BLTCC1.250A	3/8"-16 x 1-1/4" Allen Bolt	3
BLTCF1.250A	3/8"-24 x 1.250" 12pt.	3
BLTEF1.750B	1/2"-20 x 1-3/4" LG.	1
BLTEF2.250B	1/2"-20 x 2-1/4" LG.	1
BLTDF2.250B	7/16"-20 x 2-1/4" 6pt.	1
4050385Y	NASCAR Serpentine Belt	1

CV Racing Products' CVD93230 Serpentine Drive Pulley Kit comes in several configurations to fit every racers needs, whether you only need the basic pulley kit or everything from the engine block forward. The basic kit CVD93230 comes with the water pump pulley, crank pulley, power steering pulley, crank hub, mounting hardware and Continental Elite racing belt. All of our pulley drive kits are designed in conjunction with Continental engineers for minimal belt drag and the lightest weight for decreased rotating mass and maximum horsepower gains. All CV Racing Products' Drive Pulleys are hard coated for durability while extending service life in the harsh racing environment. This kit has a 6% water pump reduction ratio. See the upgrade components listed below for additional ready to race components to fit your needs.

UPGRADE COMPONENTS

WATER PUMP COMPONENTS

PART #	DESCRIPTION	QTY.
CVWP5795	Water Pump	1

ALTERNATOR COMPONENTS

PART #	DESCRIPTION	QTY.
PM8162	50A Alternator	1
PM8182	75A Alternator	1
CV32200	93mm SBC Alternator Mount Kit	1
CVD60220	Denso 3-Rib 2.700" Pulley 32% Reduction	1

BELTS

PART #	DESCRIPTION	QTY.
4030250Y	NASCAR Serpentine 25.0" 3-Rib Belt	1

POWER STEERING COMPONENTS

PART #	DESCRIPTION	QTY.
CVD73220	5-Rib Power Steering Pulley	1
CV222-SBC-LTWV	SBC Lightweight Head Mount	1
CV222-NUT	P/S Bracket Adjusting Nut	1
CV32200-3	P/S Mount Spacer .750"/.392" ID/.742" OD	3
CV4250	Power Steering Reservoir Kit	1
SPIN-PS-231NP	Short Track Pump	1
EXT4251	Xtreme Synthetic P/S Fluid 1qt.	1

FUEL PUMP COMPONENTS

PART #	DESCRIPTION	QTY.
SPIN-MP-5048	-8IN, -8OUT	1

CVD93231 SERIES

SBC LATE MODEL, LATE MODEL STOCK SERPENTINE DRIVE PULLEY KIT

603 & 604 CRATE ENGINES, LOW BLOCK MOUNT P/S - 6% REDUCTION

(NOT RECOMMENDED FOR MECHANICAL FANS)

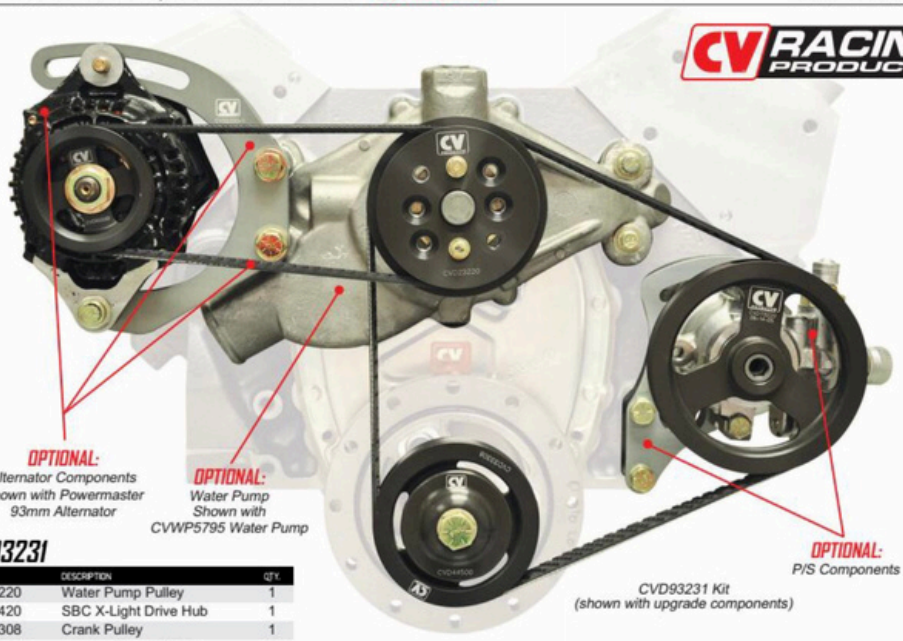

CVD93231 Kit
(shown with upgrade components)

CVD93231

PART #	DESCRIPTION	QTY.
CVD23220	Water Pump Pulley	1
CVD53420	SBC X-Light Drive Hub	1
CVD33308	Crank Pulley	1
CVD40208	Locator Tab 7/16" Hole	1
CVD43220	Crank Hub Spacer .250" Thick	2
CVD44500	Hat Washer	1
CVD73220	Power Steering Pulley	1
CVWP11739	SBC W/P O-Ring Spacers	1
BLTBL	5/16" AN Washer	4
BLTCL	3/8" AN Washer	3
BLTEL	1/2" AN Washer Zinc Coated	1
BLTDL	7/16" AN Washer	1
BLTBF.750A	5/16"-24 x 3/4" 12pt.	4
BLTCC1.250C	3/8" x 1.25" Allen Bolt	3
BLTCF1.250C	3/8" x 1.25" ALLEN BOLT	3
BLTEF1.750B	1/2"-20 x 1-3/4" LG.	1
BLTEF2.250B	1/2"-20 x 2-1/4" LG.	1
BLTDF2.250B	7/16"-20 x 2-1/4" 6pt.	1
4050335Y	NASCAR Serpentine Belt	1

CVD93231 KIT



CV Racing Products' CVD93231 Serpentine Drive Pulley Kit comes in several configurations to fit every racers needs, whether you only need the basic pulley kit or everything from the engine block forward. The basic kit CVD93231 comes with the water pump pulley, crank pulley, power steering pulley, crank hub, mounting hardware and Continental Elite racing belt. All of our pulley drive kits are designed in conjunction with Continental engineers for minimal belt drag and the lightest weight for decreased rotating mass and maximum horsepower gains. All CV Racing Products' Drive Pulleys are hard coated for durability while extending service life in the harsh racing environment. This kit has a 6% water pump reduction ratio. See the upgrade components listed below for additional ready to race components to fit your needs.

UPGRADE COMPONENTS

WATER PUMP COMPONENTS

PART #	DESCRIPTION	QTY.
CVWP5795	Water Pump	1

ALTERNATOR COMPONENTS

PART #	DESCRIPTION	QTY.
PM8162	50A Alternator	1
PM8182	75A Alternator	1
CV32200	93mm SBC Alternator Mount Kit	1
CVD60220	Denso 3-Rib 2.700" Pulley 32% Reduction	1

BELTS

PART #	DESCRIPTION	QTY.
4030250Y	NASCAR Serpentine 25.0" 3-Rib Belt	1

POWER STEERING COMPONENTS

PART #	DESCRIPTION	QTY.
CVD73220	5-Rib Power Steering Pulley	1
CV3224	SBC Low Mount P/S Kit	1
CV4250	Power Steering Reservoir Kit	1
SPIN-PS-231NP	Short Track Pump	1
EXT4251	Xtreme Synthetic P/S Fluid 1qt.	1

FUEL PUMP COMPONENTS

PART #	DESCRIPTION	QTY.
SPIN-MP-5048	-8IN, -8OUT	1

CVD93220 SERIES
ALTERNATOR S-DRIVE™ KITS & COMPONENTS

CVD93224

SBC ALTERNATOR DRIVE KIT	
PART #	DESCRIPTION
CVD20220	6 Rib Water Pump Pulley
CVD60220	Denso 3 Rib Alternator Pulley
4030250	Belt

NOTE: This kit is designed for water pump pulleys that do not include an alternator drive pulley.

CVD93225

SBC ALTERNATOR PULLEY KIT	
PART #	DESCRIPTION
CVD60220	Denso 3 Rib Alternator Pulley
4030250	Belt

NOTE: This kit is designed for 1-pc. water pump pulley with an addtional 3 Rib.

CVD93226

SBF 351W ALTERNATOR PULLEY KIT	
PART #	DESCRIPTION
CVD60220	Denso 3 Rib Alternator Pulley
4030240	Belt

NOTE: This kit is designed for 1-pc. water pump pulleys with an alternator drive pulley.

CVD93225
S-Drive™ Alternator Drive Kit

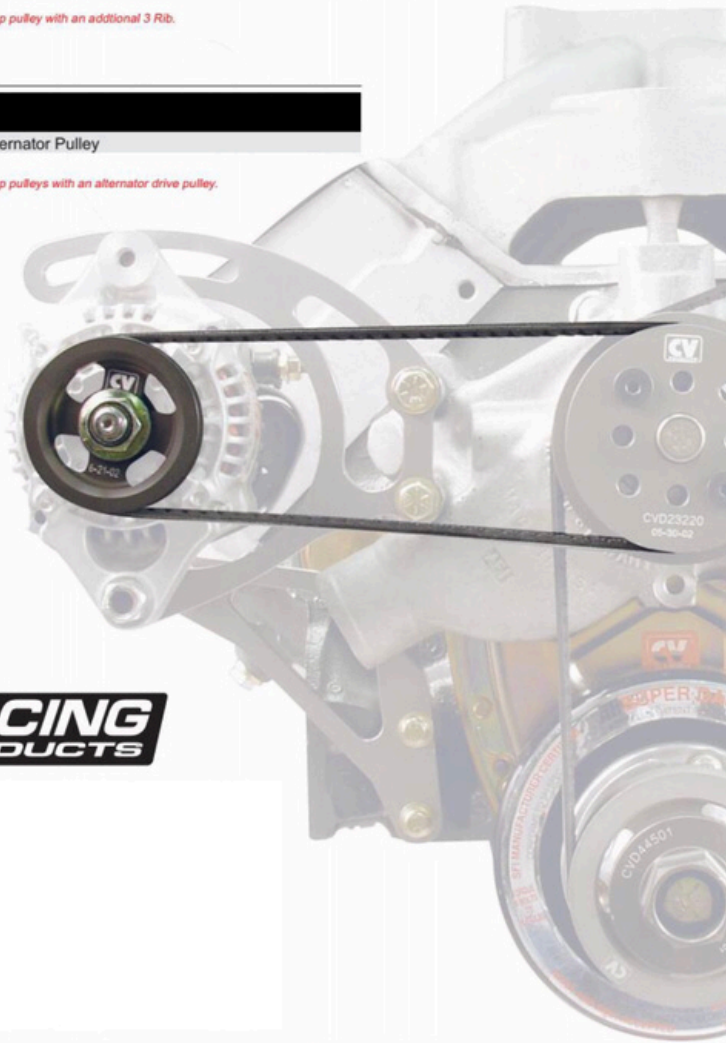

CV RACING PRODUCTS

CVD91310

SBC V-BELT FAN DRIVE - 30% W/P REDUCTION		
PART #	DESCRIPTION	QTY.
CVD20202	Water Pump Pulley	1
CVD30208	Crankshaft Pulley	1
CVD44439	Hex Head Hat Washer	1
BLTDL	7/16" AN Washer	3
BLTEL	1/2" AN Washer	1
BLTCC1.250A	Bolt 3/8"-16 x 1-1/4"	3
BLTDF2.250B	7/16"-20 x 2-1/4" LG.	1
15325DY	Matched Set of 2 Belts	1

CVD91311

SBC V-BELT FAN DRIVE - 20% W/P REDUCTION		
PART #	DESCRIPTION	QTY.
CVD22030	Water Pump Pulley	1
CVD30208	Crankshaft Pulley	1
CVD44439	Hex Head Hat Washer	1
BLTCL	3/8" AN Washer	3
BLTEL	1/2" AN Washer	1
BLTCC1.250A	Bolt 3/8"-16 x 1-1/4"	3
BLTEF2.250B	1/2"-20 x 2-1/4" LG.	1
15310DY	NASCAR V-Belt (Matched Set)	1

CV RACING PRODUCTS

CV Products still manufactures V-Belt pulleys and drives. One of our most popular drive series is the mechanical fan drive for dirt cars. This drive uses a matched set of Continental V-Belts. Mechanical fan drives do require a fair amount of power and also have to deal with the harsh environment of dirt tracks. These hard coated 6061-T6 pulleys will do the job.



SBC V-Belt Fan Drive

UPGRADE COMPONENTS
30% W/P REDUCTION

WATER PUMP COMPONENTS		
PART #	DESCRIPTION	QTY.
CVWP5795	Water Pump	1

FAN COMPONENTS		
PART #	DESCRIPTION	QTY.
CV1518	18" Mechanical 4 Blade Fan	1
CV1519	19" Mechanical 4 Blade Fan	1
CV100200	2.00" Fan Spacer	1
CV100225	2.25" Fan Spacer	1
CV100250	2.50" Fan Spacer	1
CV100275	2.75" Fan Spacer	1
CV100300	3.00" Fan Spacer	1

UPGRADE COMPONENTS
20% W/P REDUCTION

WATER PUMP COMPONENTS		
PART #	DESCRIPTION	QTY.
CVWP5795	Water Pump	1

FAN COMPONENTS		
PART #	DESCRIPTION	QTY.
CV1518	18" Mechanical 4 Blade Fan	1
CV1519	19" Mechanical 4 Blade Fan	1
CV100200	2.00" Fan Spacer	1
CV100225	2.25" Fan Spacer	1
CV100250	2.50" Fan Spacer	1
CV100275	2.75" Fan Spacer	1
CV100300	3.00" Fan Spacer	1

CVD91320

BBC V-BELT FAN DRIVE - 30% W/P REDUCTION

PART #	DESCRIPTION	QTY.
CVD20202	Water Pump Pulley	1
CVD30208	Crankshaft Pulley	1
CVD44300	BBC Adapter	1
CVD44501	Hex Head Hat Washer	1
BLTCL	3/8" AN Washer	3
BLTEL	1/2" AN Washer	1
BLTCC1.250A	Bolt 3/8"-16 x 1-1/4"	3
BLTEF2.250B	1/2"-20 x 2-1/4" LG.	1
15325DY	Matched Set of 2 Belts	1

CVD91321

BBC V-BELT FAN DRIVE - 20% W/P REDUCTION

PART #	DESCRIPTION	QTY.
CVD22030	Water Pump Pulley	1
CVD30208	Crankshaft Pulley	1
CVD44300	BBC Adapter	1
CVD44501	Hex Head Hat Washer	1
BLTCL	3/8" AN Washer	3
BLTEL	1/2" AN Washer	1
BLTCC1.250A	Bolt 3/8"-16 x 1-1/4"	3
BLTEF2.250B	1/2"-20 x 2-1/4" LG.	1
15310DY	NASCAR V-Belt (Matched Set)	1

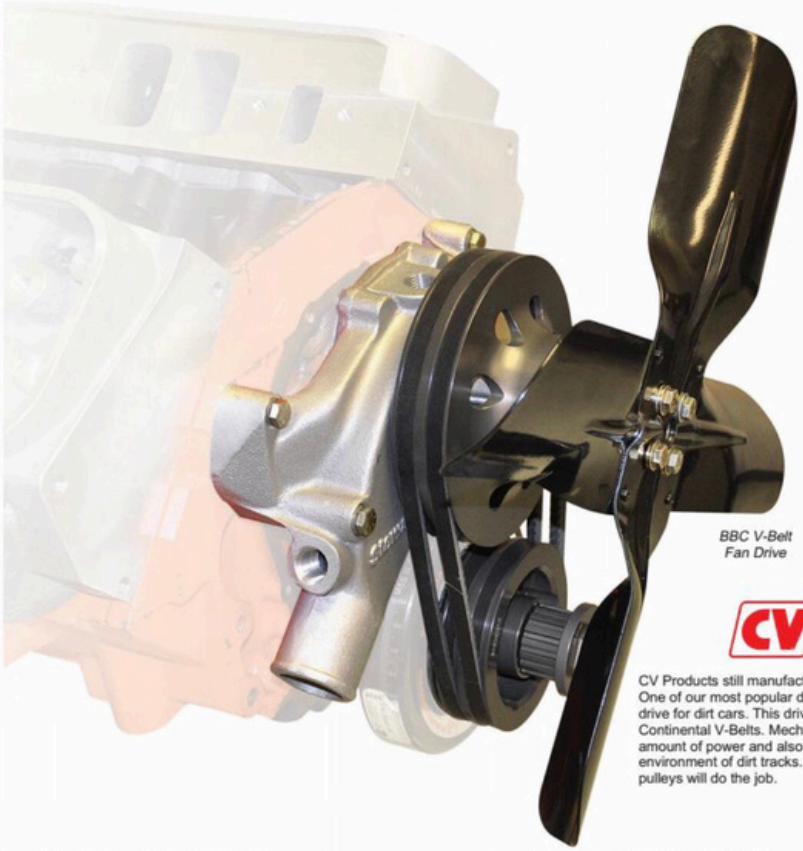

BBC V-Belt Fan Drive

CV Products still manufactures V-Belt pulleys and drives. One of our most popular drive series is the mechanical fan drive for dirt cars. This drive uses a matched set of Continental V-Belts. Mechanical fan drives do require a fair amount of power and also have to deal with the harsh environment of dirt tracks. These hard coated 6061-T6 pulleys will do the job.

UPGRADE COMPONENTS
30% W/P REDUCTION

WATER PUMP COMPONENTS

PART #	DESCRIPTION	QTY.
SC31203	Water Pump	1

FAN COMPONENTS

PART #	DESCRIPTION	QTY.
CV1518	18" Mechanical 4 Blade Fan	1
CV1519	19" Mechanical 4 Blade Fan	1
CV100200	2.00" Fan Spacer	1
CV100225	2.25" Fan Spacer	1
CV100250	2.50" Fan Spacer	1
CV100275	2.75" Fan Spacer	1
CV100300	3.00" Fan Spacer	1

UPGRADE COMPONENTS
20% W/P REDUCTION

WATER PUMP COMPONENTS

PART #	DESCRIPTION	QTY.
SC31203	Water Pump	1

FAN COMPONENTS

PART #	DESCRIPTION	QTY.
CV1518	18" Mechanical 4 Blade Fan	1
CV1519	19" Mechanical 4 Blade Fan	1
CV100200	2.00" Fan Spacer	1
CV100225	2.25" Fan Spacer	1
CV100250	2.50" Fan Spacer	1
CV100275	2.75" Fan Spacer	1
CV100300	3.00" Fan Spacer	1
CV100325	3.25" Fan Spacer	1

CVD91330

SBF V-BELT FAN DRIVE - 30% W/P REDUCTION		
PART #	DESCRIPTION	QTY.
CVD20202	Water Pump Pulley	1
CVD30206	Crankshaft Pulley	1
CVD44501	Hex Head Hat Washer	1
BLTCL	3/8" AN Washer	3
BLTEL	1/2" AN Washer	1
BLTCC1.250A	Bolt 3/8"-16 x 1-1/4"	3
BLTEF2.250B	1/2"-20 x 2-1/4" LG.	1
15325DY	Matched Set of 2 Belts	1

CVD91331

SBF V-BELT FAN DRIVE - 20% W/P REDUCTION		
PART #	DESCRIPTION	QTY.
CVD22030	Water Pump Pulley	1
CVD30206	Crankshaft Pulley	1
CVD44501	Hex Head Hat Washer	1
BLTCL	3/8" AN Washer	3
BLTEL	1/2" AN Washer	1
BLTCC1.250A	Bolt 3/8"-16 x 1-1/4"	3
BLTEF2.250B	1/2"-20 x 2-1/4" LG.	1
15310DY*	NASCAR V-Belt (Matched Set)	1

** Other Belts Available*

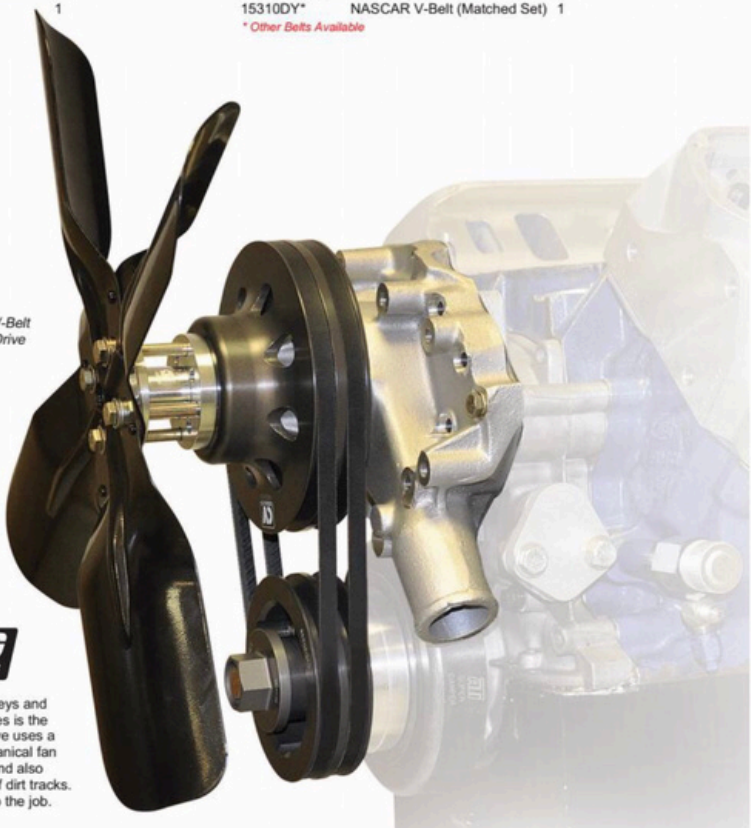

SBF V-Belt Fan Drive

CV Products still manufactures V-Belt pulleys and drives. One of our most popular drive series is the mechanical fan drive for dirt cars. This drive uses a matched set of Continental V-Belts. Mechanical fan drives do require a fair amount of power and also have to deal with the harsh environment of dirt tracks. These hard coated 6061-T6 pulleys will do the job.

UPGRADE COMPONENTS
30% W/P REDUCTION

WATER PUMP COMPONENTS		
PART #	DESCRIPTION	QTY.
SC36113	Water Pump	1

FAN COMPONENTS		
PART #	DESCRIPTION	QTY.
CV1518	18" Mechanical 4 Blade Fan	1
CV1519	19" Mechanical 4 Blade Fan	1
CV100200	2.00" Fan Spacer	1
CV100225	2.25" Fan Spacer	1
CV100250	2.50" Fan Spacer	1
CV100275	2.75" Fan Spacer	1
CV100300	3.00" Fan Spacer	1

UPGRADE COMPONENTS
20% W/P REDUCTION

WATER PUMP COMPONENTS		
PART #	DESCRIPTION	QTY.
SC36113	Water Pump	1

FAN COMPONENTS		
PART #	DESCRIPTION	QTY.
CV1518	18" Mechanical 4 Blade Fan	1
CV1519	19" Mechanical 4 Blade Fan	1
CV100200	2.00" Fan Spacer	1
CV100225	2.25" Fan Spacer	1
CV100250	2.50" Fan Spacer	1
CV100275	2.75" Fan Spacer	1
CV100300	3.00" Fan Spacer	1
CV100325	3.25" Fan Spacer	1

CV22222

SBC ALTERNATOR MOUNTING BRACKET KIT

- Passenger Side - High Mount
- Designed to mount 93mm Denso-style alternators
- 6061 T-6 billet aluminum
- Grade 8 fasteners
- Spacers and washers included

Fits the following Powermaster alternator applications:
CV8162-PM
CV8172-PM



KIT INCLUDES:

REF #	PART #	DESCRIPTION	QTY.
1	CV22222-A	Large Alternator Bracket	1
2	CV22222-B	Small Alternator Bracket	1
3	CV22222-C	1.375" Spacer	1
4	CV22222-D	.675" Spacer	3
5	CV22222-E	.312" Spacer	1
6	BLTCK	3/8" Super Washer	5
7	BLTCCT	3/8"-16 Nylon Insert Nut	1
8	BLTCC2.750B	3/8"-16 x 2.750" Hex Bolt	1
9	BLTCC3.500B	3/8"-16 x 3.500" Hex Bolt	1
10	BLTCC3.750B	3/8"-16 x 3.750" Hex Bolt	1

CV RACING PRODUCTS

INSTALLATION OF CV22222

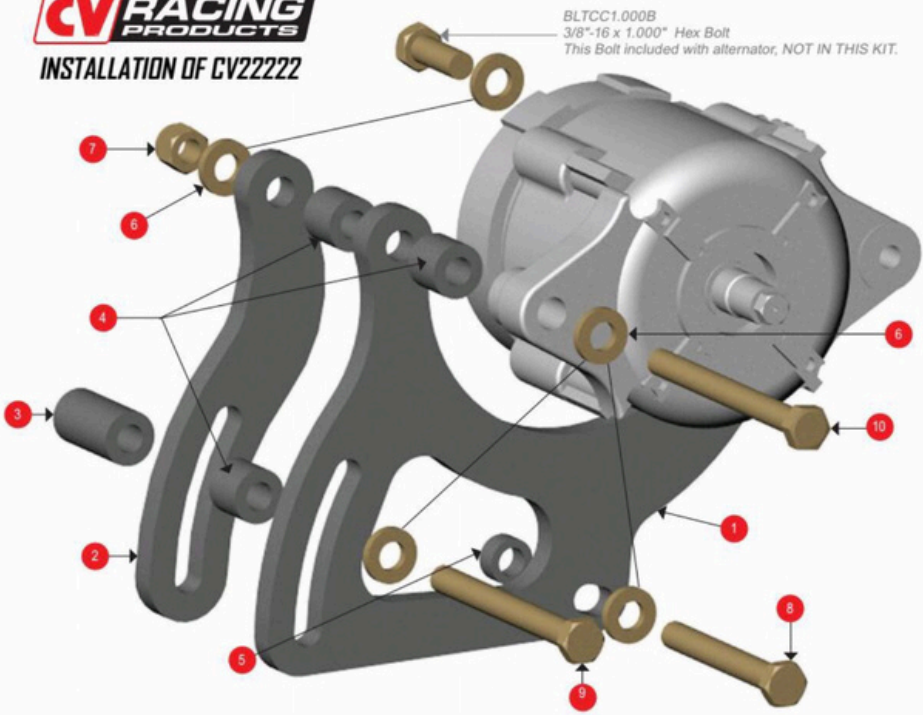

CV22220
SBC ALTERNATOR MOUNTING BRACKET KIT

- Passenger Side - High Mount
- Designed to mount 110-118mm Denso-style alternators
- 6061 T-6 billet aluminum
- Grade 8 fasteners
- Spacers and washers included

Fits the following Powermaster alternator applications:
CV8102-PM
CV8132-PM
CV8142-PM*
CV8152-PM*

**NOTE: Application may require spacer adjustments.*

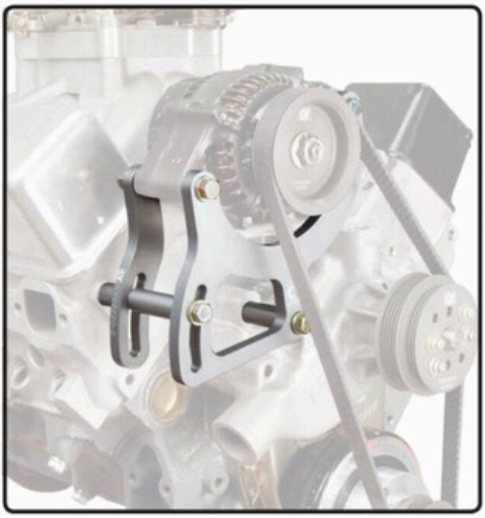

KIT INCLUDES:

REF #	PART #	DESCRIPTION	QTY.
1	CV22220-1	Large Alternator Bracket	1
2	CV22220-2	Small Alternator Bracket	1
3	CV22220-3	2.250" Spacer	1
4	CV22220-4	1.695" Spacer	1
5	CV22220-5	.965" Spacer	1
6	BLTCL	3/8" AN Washer	1
7	BLTCK	3/8" Super Washer	4
8	BLTCCT	3/8"-16 Nylon Insert Nut	1
9	BLTCC4.000B	3/8"-16 x 4.000" Hex Bolt	2
10	BLTCC5.000B	3/8"-16 x 5.000" Hex Bolt	1
11	BLT8MMWASHER	8mm Washer	1
12	BLT8MM-1.25MMX1.500	1.500" Bolt	1

CV RACING PRODUCTS

INSTALLATION OF CV22220

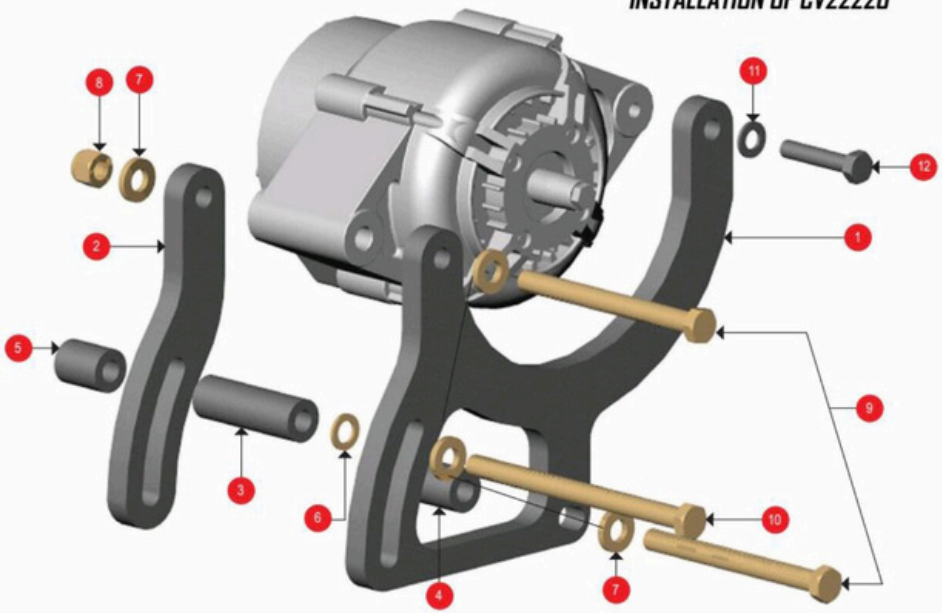

CV22224
SBC ALTERNATOR MOUNTING BRACKET KIT

- Passenger Side - High Mount
- Designed to mount 110-118mm Denso-style alternators
- 6061 T-6 billet aluminum
- Grade 8 fasteners
- Spacers and washers included

Fits the following Powermaster alternator applications:
CV8162-PM
CV8172-PM

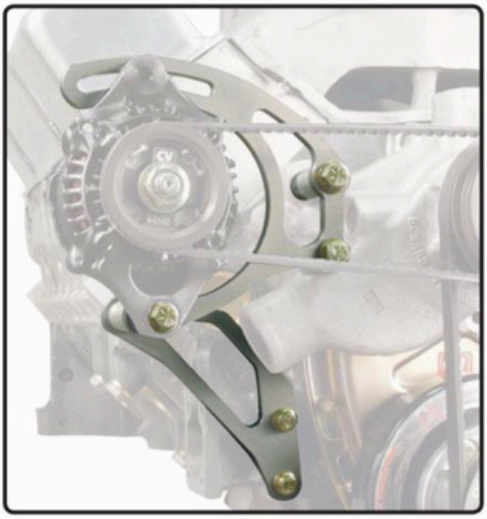

KIT INCLUDES:

REF #	PART #	DESCRIPTION	QTY.
1	CV22224-1	Large Alternator Bracket	1
2	CV22224-2	Small Alternator Bracket	1
3	CV22224-11	.750" Spacer	1
4	CV22224-12	2.663" Spacer	1
5	CV22224-13	1.859" Spacer	1
5	CV22224-14	1.048" Spacer	1
-	CV22224-15*	1.863" Spacer	1
-	CV22224-16*	1.059" Spacer	1
-	CV22224-17*	.248" Spacer	1
10	BLTCK	3/8" Super Washer	4
11	BLTCC1.000B	3/8"-16 x 1.000" Hex Bolt	2
12	BLTCC4.500B	3/8"-16 x 4.500" Hex Bolt	2
13	BLTCC5.000B	7/16"-14 x 5.000" Hex Bolt	1
14	BLTDK	7/16" Super Washer	1

**NOTE: Additional spacers available for other spacing options*

CV RACING PRODUCTS

INSTALLATION OF CV22224

NOTES:
When using a CVD23220 Water Pump Pulley or CVD93220 Kit, use the following spacers:

CV22224-11
CV22224-12
CV22224-13
CV22224-14

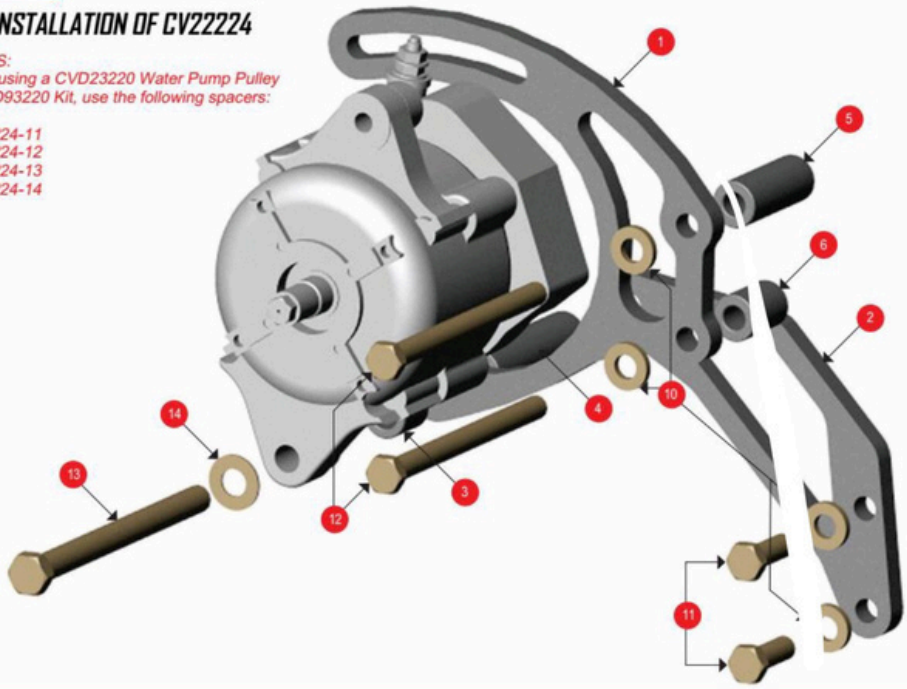

CV22225

SBC ALTERNATOR MOUNTING BRACKET KIT

- Passenger Side - High Mount
- Designed to mount 110-118mm Denso-style alternators
- 6061 T-6 billet aluminum
- Grade 8 fasteners
- Spacers and washers included

Fits the following Powermaster alternator applications:
CV8102-PM
CV8132-PM
CV8142-PM*
CV8152-PM*
CV8166-PM*

NOTE: Application may require spacer adjustments.

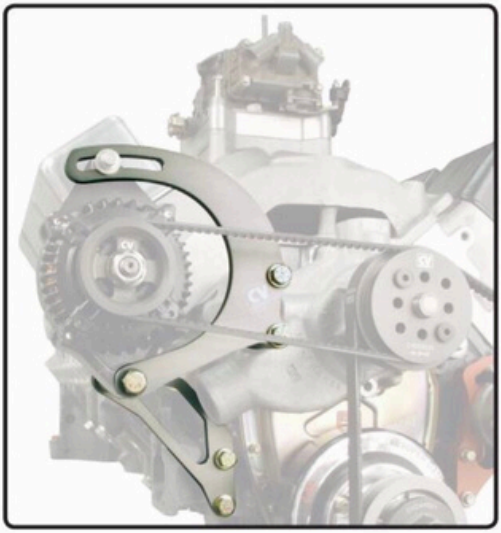

KIT INCLUDES:

REF #	PART #	DESCRIPTION	QTY.
1	CV22225-1	Large Alternator Bracket	1
2	CV22224-2	Small Alternator Bracket	1
-	CV22225-2*	2.250" Spacer	1
-	CV22225-3*	1.441" Spacer	1
-	CV22225-4*	.806" Spacer	1
6	CV22225-5	3.025" Spacer	1
7	CV22225-6	2.241" Spacer	1
8	CV22225-7	1.606" Spacer	1
9	BLTCK	3/8" Super Washer	4
10	BLTDK	7/16" Super Washer	1
11	BLTCC1.000B	3/8"-16 x 1.000" Hex Bolt	2
12	BLTCC4.500B	3/8"-16 x 4.500" Hex Bolt	2
-	BLTCC5.250B*	3/8"-16 x 5.250" Hex Bolt	2
-	BLTCC4.000B*	7/16"-14 x 4.000" Hex Bolt	1
15	BLTCC5.000B*	7/16"-14 x 5.000" Hex Bolt	1

NOTE: Additional spacers and bolts available for other spacing options

CV RACING PRODUCTS

INSTALLATION OF CV22225

NOTES:
When using a CVD23222 or CVD23300 Water Pump Pulley, use the following spacers:

CV22225-2
CV22225-3
CV22225-4

When using a CVD23220 Water Pump Pulley or CVD93220 Kit, use the following spacers:

CV22225-5
CV22225-6
CV22225-7

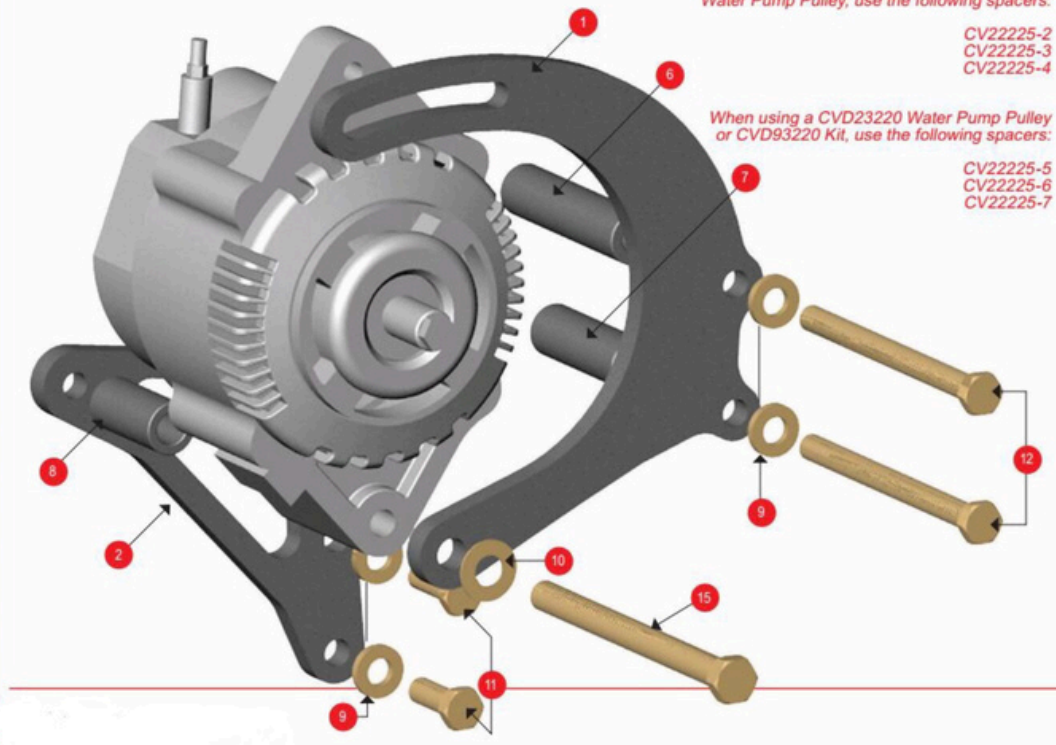

CV32200
SBC/BBC ALTERNATOR MOUNTING BRACKET KIT

- Passenger Side - High Mount
- Designed to mount 93mm Denso-style alternators
- 6061 T-6 billet aluminum
- Grade 8 fasteners
- Spacers and washers included

Fits the following Powermaster alternator applications:
CV8162-PM
CV8172-PM

NOTE: The CV32200 mounting bracket will work with a variety of pulley/belt drive systems, but has been designed specifically for use with the CVD93220 S-Drive™ serpentine drive system.

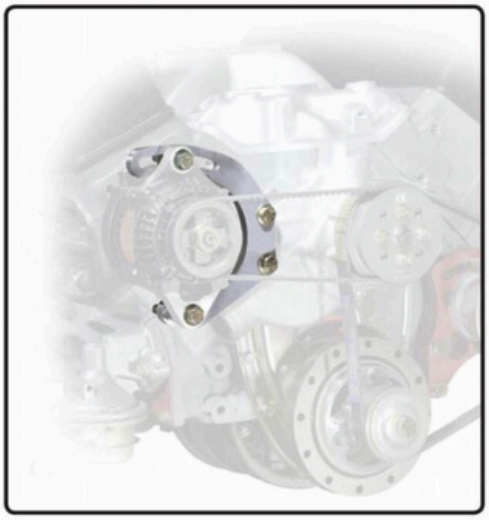

KIT INCLUDES:

REF #	PART #	DESCRIPTION	QTY.
1	CV32200-1	Alternator Bracket	1
2	CV32200-3	.750" Spacer	2
-	CV32200-4*	.900" Spacer	1
4	CV32200-5	1.500" Spacer	1
-	CV32200-6*	1.750" Spacer	1
6	BLTCK	3/8" Super Washer	4
7	BLTCCT	3/8" Nylon Insert Nut	1
8	BLTCC2.500B	3/8"-16 x 2.500" Hex Bolt	1
9	BLTCC4.000B	3/8"-16 x 4.000" Hex Bolt	2

NOTE: Additional spacers available for other spacing options

CV RACING PRODUCTS

INSTALLATION OF CV32200

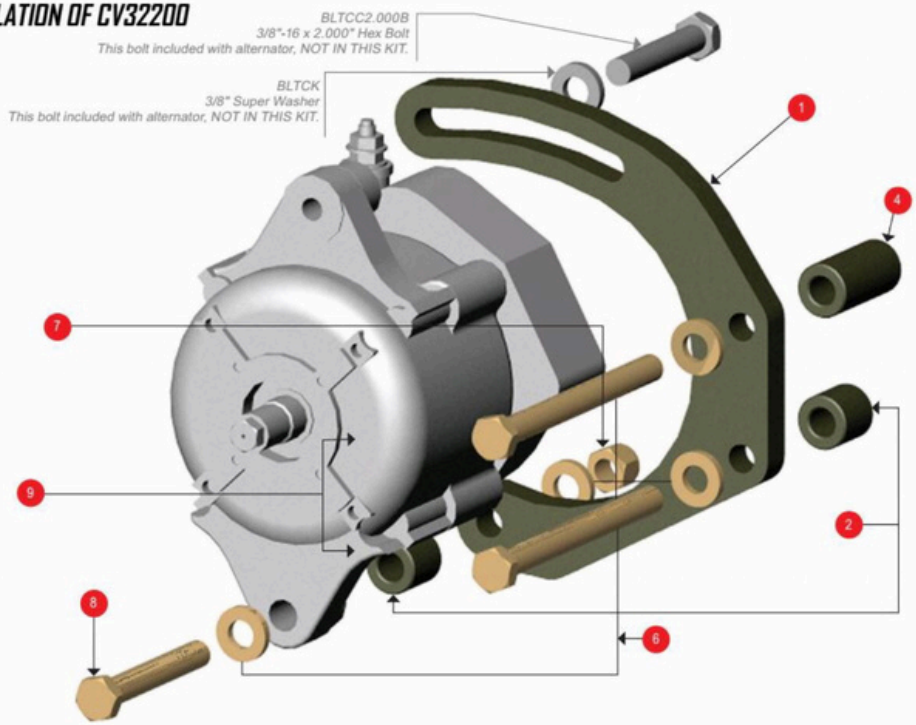

CV32201
SBF 351W ALTERNATOR MOUNTING BRACKET KIT

- Passenger Side - High Mount
- Designed to mount 93mm Denso-style alternators
- 6061 T-6 billet aluminum
- Grade 8 fasteners
- Spacers and washers included

Fits the following Powermaster alternator applications:
CV8162-PM
CV8172-PM

NOTE: The CV32201 mounting bracket will work with a variety of pulley/belt drive systems, but has been designed specifically for use with the CVD93222 S-Drive™ serpentine drive system.

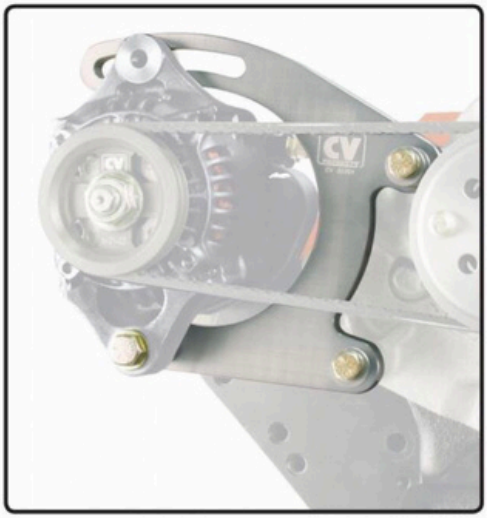

KIT INCLUDES:

REF #	PART #	DESCRIPTION	QTY.
1	CV32201-1	Alternator Bracket	1
2	CV32201-2*	.550" Spacer	1
3	CV32201-3	.750" Spacer	1
-	CV22224-17**	.248" Spacer	1
-	CV22226-1*	1.135" Spacer	1
6	BLTCL	3/8" AN Washer	1
7	BLTCK	3/8" Super Washer	4
8	BLTCC2.750B	3/8"-16 x 2.750" Hex Bolt	1
9	BLTCC5.500B	5/16"-18 x 5.500" Hex Bolt	1
10	BLTCCT	3/8" Nylon Insert Nut	1
11	BLTBK	5/16" Super Washer	2
12	BLTBC3.250B	5/16"-18 x 2.250" Hex Bolt	1

**THESE spacers are designed for use with a SC46113 Stewart Water Pump.*

***Stock Ford Water Pump Application:*
Upper Hole: use CV22224-17 (.248" spacer) in place of (1) 3/8" AN Washer (.066") and (1) 3/8" Super Washer (.125"), for a total of 0.191"
Lower Hole: use CV22226-1 (1.135" spacer) in place of CV32201-2 (.550" spacer)

CV RACING PRODUCTS

INSTALLATION OF CV32201

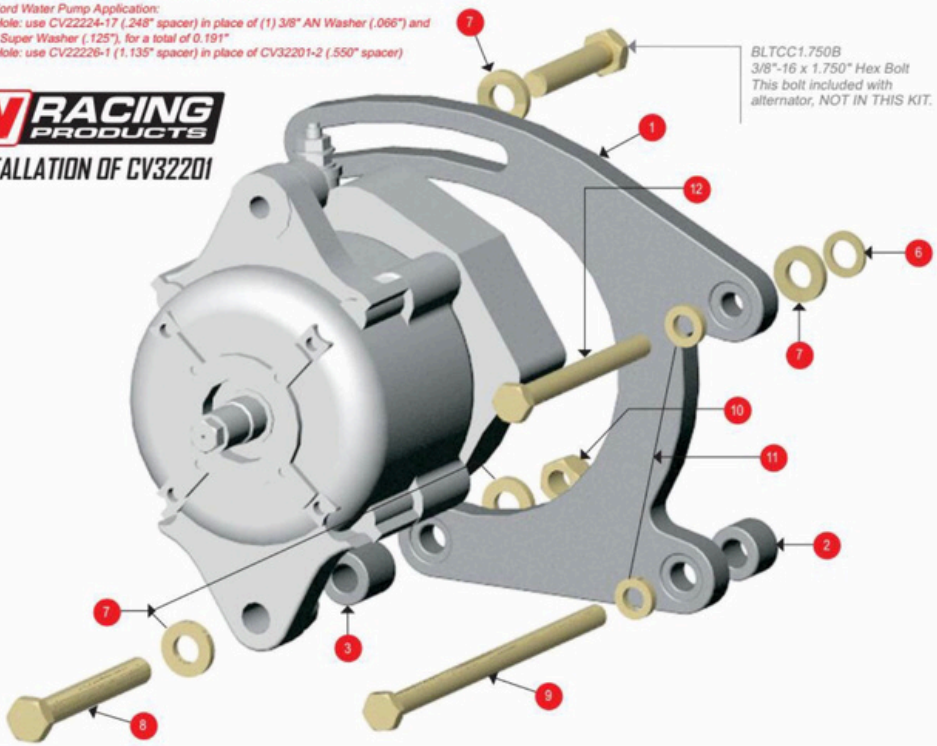

CV32202
SBF ALTERNATOR MOUNTING BRACKET KIT

- Passenger Side - High Mount
- Designed to mount 110mm Denso-style alternators
- 6061 T-6 billet aluminum
- Grade 8 fasteners
- Spacers and washers included

Fits the following Powermaster alternator applications:
CV8102-PM
CV8132-PM
CV8142-PM*
CV8152-PM*
CV8166-PM*

NOTE: Application may require spacer adjustments.

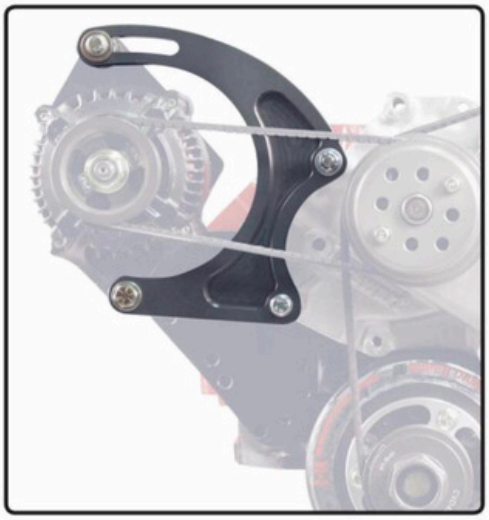

KIT INCLUDES:

REF #	PART #	DESCRIPTION	QTY.
1	CV32202-1	Alternator Bracket	1
-	CV32202-2*	.420" Spacer	2
3	CV32202-3	1.444" Spacer	1
4	CV32202-4	1.620" Spacer	1
5	BLTCC1.500B	3/8"-16 x 1.500" Hex Bolt	1
6	BLTCC3.500B	3/8"-16 x 3.500" Hex Bolt	1
7	BLTCK	3/8" Super Washer	2
8	BLTBC4.500B	5/16"-18 x 4.500" Hex Bolt	1
9	BLTBC7.500B	5/16"-18 x 7.500" Hex Bolt	1
10	BLTK*	5/16" Super Washer	3

Stock Ford Water Pump Application:
Upper Hole: Use (1) 5/16" Super Washer (.135" long) along with (1) CV32202-3 (1.444" long), for a total of 1.579" long.
Lower Hole: Use (2) CV32202-2 (.420" long) with (1) CV32202-4 (1.620" long), for a total of 2.460" long.

CV RACING PRODUCTS

INSTALLATION OF CV32202

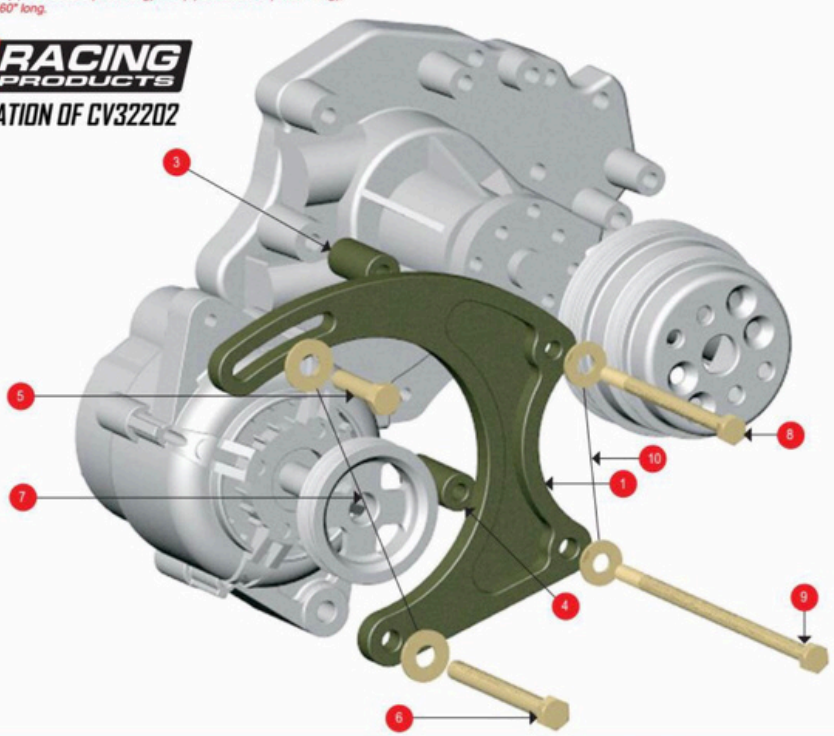

WATER PUMP PULLEYS

V-GROOVE

PART #	DESCRIPTION	OD	OFFSET
CVD20202	Ford Double V-Groove Pulley	6.950"	2.706"
CVD22000	SBC Double V-Groove Pulley	7.800"	2.700"
CVD22030	SBC Double V-Groove Pulley	6.400"	2.700"

SERPENTINE

PART #	DESCRIPTION	OD	OFFSET
CVD20220	6-Rib Pulley	3.490"	1.683"
CVD20221	Accessory Pulley	3.200"	-
CVD20222	Accessory Pulley	2.851"	0.400"
CVD23220	5/3-Rib Pulley	3.953"/3.515"	1.292"
CVD23224	5/3-Rib Pulley	3.953"/3.515"	2.134"
CVD23225	5/3-Rib Pulley	4.953"/3.515"	2.434"
CVD23226	5/3-Rib Pulley SBF	3.953"/3.515"	2.434"
CVD23227	5/3-Rib Pulley SBF	3.953"/3.515"	2.434"
CVD23229	5/3-Rib Pulley SBF	3.953"/3.515"	2.684"
CVD23300	Twin 5-Rib Pulley	5.430"	2.127"
CVD23303	6/3-Rib Pulley	5.429"	2.127"
CVD23310	6-Rib Pulley	5.302"	1.828"
CVD23400	6/3-Rib Pulley	5.295"	2.475"
CVD24222	Counter Clockwise Pulley	5.490"	1.740"
CVD24225	5-Rib Chrysler Pulley	3.953"	2.804"

ACCESSORIES

PART #	DESCRIPTION	OD	ID
CVD40500	Adapter Bushing	0.750"	0.625"


CVD22000


CVD20202


CVD20221


CVD23221


CVD40500


CVD23224


CVD23226


CVD23304


CVD24222

WHAT DOES "OFFSET" MEAN

This is the distance from the inside of the pulley that contacts the water pump mounting flange to the back of the pulley.



CVD23220

CRANK PULLEYS

V-GROOVE

PART #	DESCRIPTION	OD	OFFSET
CVD30202	Single Groove with Twin Pin	5.000"	-
CVD30206	Double V-Groove, Ford	5.125"	1.05"
CVD30208*	Double V-Groove, SBC/BBC	4.984"	0.135"
CVD30209	Double V-Groove, SBC/BBC	4.984"	0.135"
CVD30298**	Double V-Groove w/Helicoli	4.984"	0.135"

**has an external locator **has a tab locator - See page 42*

SERPENTINE

PART #	DESCRIPTION	OD	OFFSET
CVD30220	6-Rib Serpentine	2.500"	0.978"
CVD33220	5-Rib Serpentine	2.825"	0.478"
CVD33302	5-Rib Serpentine	2.702"	-
CVD33304*	6-Rib Serpentine	3.700"	-
CVD33304-060*	6-Rib Serpentine	3.640"	-0.430"
CVD33304-020*	6-Rib Serpentine	3.680"	-0.430"
CVD33304+020*	6-Rib Serpentine	3.720"	-0.430"
CVD33304+040*	6-Rib Serpentine	3.740"	-0.430"
CVD33304+060*	6-Rib Serpentine	3.760"	-0.430"
CVD33308	5-Rib Serpentine	3.700"	-
CVD33310	6-Rib Serpentine	4.382"	1.769"
CVD33400	6/3-Rib Serpentine	5.300"	2.470"

**CVD33304 series pulleys are available in .020" incriments to aid in finding the correct belt tension for your application.*



CVD30206



CVD30208



CVD33220



CVD33302

ALTERNATOR PULLEYS

V-GROOVE

PART #	DESCRIPTION	OD	OFFSET
CVD62041	Delco V-Groove	4.740"	0.153"
CVD62051	Denso V-Groove	5.500"	-
CVD62052	Denso V-Groove	5.490"	-
CVD62053	Denso V-Groove	5.490"	0.154"
CVD62060	Denso V-Groove	4.980"	0.275"

SERPENTINE

PART #	DESCRIPTION	OD	OFFSET
CVD60220	Denso 3-Rib	2.700"	0.275"
CVD63301	Bosch 5-Rib	2.050"	0.679"
CVD63304	Delco 3-Rib	3.690"	0.275"
CVD63305	Bosch 3-Rib	2.160"	0.017"
CVD63307	Denso 3-Rib	2.100"	0.275"
CVD64220	Denso 5-Rib	3.700"	0.275"



CVD34220



CVD62050

ALTERNATOR SPACERS

PART #	DESCRIPTION	OD	ID
CVD62045	Delco Spacer	0.390"	0.867"



CVD63305



CVD63307



CVD60220

POWER STEERING PULLEYS

V-GROOVE

PART #	DESCRIPTION	OD
CVD70204	V-Groove Pulley (Crank Mount)	3.000"
CVD70205	V-Groove Pulley (W/P Mount)	3.240"
CVD72060	V-Groove Pulley	6.126"
CVD75004	Interchangeable V-Groove Pulley*	10.000"

Requires CVD75000



CVD70204



CVD70205

SERPENTINE

PART #	DESCRIPTION	OD
CVD73220	5-Rib Pulley	4.700"
CVD75005*	Interchangeable 5-Rib Pulley	5.975"
CVD75008*	Interchangeable 3-Rib Pulley	5.928"
CVD75305*	Interchangeable 3-Rib Pulley	3.900"
CVD75306*	Interchangeable 3-Rib Pulley	5.950"
CVD75307*	Interchangeable 3-Rib Pulley	4.996"

Requires CVD75000



CVD72060

CVD74304



CVD75005





CVD75008



CVD73220

The NEW CVD75001 and CVD75002 pulleys have a unique design that will eliminate the ordinary hassles involved with changing a power steering pulley. You simply press the CV75000 adapter hub onto your power steering pump and attach the pulley to the hub with 6 screws. If you need to change from a V-Belt system to an S-Drive system (or vice versa), or simply need to change to a different pulley size, you simply remove the 6 screws. This new design eliminates the possibility of damaging a pulley, which is common when removing a "pressed-on" pulley.



CVD75000



CVD75100

POWER STEERING ACCESSORIES

PART #	DESCRIPTION
CVD75000	Interchangeable Pulley Hub

REAR END COOLER PUMP DRIVE PULLEY

PART #	DESCRIPTION	OD	SHAFT
CVD40100	Rear End Cooler Pump Drive Pulley	6.450"	5/8"



CVD40100

GILMER GEAR SQUARE OIL PUMP DRIVE GEARS

PART #	TOOTH #	WIDTH	DESCRIPTION
CVD11133	33T	1.000"	Solid Center
CVD11136	36T	1.000"	Solid Center
CVD11228	28T	1.000"	Lightweight
CVD11230	30T	1.000"	Lightweight
CVD11233	33T	1.000"	Lightweight
CVD11326	26T	1.500"	Solid Center
CVD11332	32T	1.500"	Solid Center
CVD11333	33T	1.500"	Solid Center
CVD11336	36T	1.500"	Solid Center
CVD11426	26T	1.500"	Lightweight
CVD11430	30T	1.500"	Lightweight
CVD11432	32T	1.500"	Lightweight
CVD11433	33T	1.500"	Lightweight
CVD11436	36T	1.500"	Lightweight

CVD11132





CVD11228



CVD11232



CVD11432

GILMER GEAR SQUARE WATER PUMP DRIVE GEARS

PART #	TOOTH #	THICKNESS
CVD12210	30T	2.205"
CVD12220	32T	2.205"



CVD12200

GILMER GEAR SQUARE TWIN-PIN™ DRIVE GEARS

PART #	TOOTH #	THICKNESS
CVD15216	16T	1.100"
CVD15217	17T	1.100"
CVD15218	18T	1.100"
CVD15222	22T	1.100"
CVD15223	23T	1.100"
CVD15316	16T	0.600"

CVD15316



CVD15216





CVD11028

GILMER GEAR/HTD SQUARE GEAR DRIVES

PART #	TOOTH #	THICKNESS
CVD11028	28T	2.602"
CVD11030	30T	2.820"
CVD11032	32T	3.087"

HTD (8MM) ROUND OIL PUMP DRIVE GEARS

PART #	TOOTH #	THICKNESS
CVD11632	32T	1.100"
CVD11640	40T	1.100"
CVD11642	42T	1.125"
CVD11645	45T	1.100"
CVD11936*	36T	1.500"

*Bert Brin Pulley





HTD (8MM) ROUND WATER PUMP DRIVE GEARS

PART #	TOOTH #	THICKNESS
CVD12340	40T	2.205"



HTD (8MM) ROUND KEYLOCK™ DRIVE GEARS

PART #	TOOTH #	THICKNESS
CVD15516	16T	0.850"
CVD15517	17T	0.850"
CVD15518	18T	0.850"
CVD15519	19T	0.850"
CVD15520	20T	0.850"
CVD15521	21T	0.850"
CVD15522	22T	0.850"



Close Up View of Keylock Design



CVD15516

HTD (8MM) ROUND TWIN-PIN™ DRIVE GEARS

PART #	TOOTH #	THICKNESS
CVD15622	22T	0.850"
CVD15623	23T	0.850"
CVD15624	24T	0.850"
CVD15625	25T	0.850"



CVD15624



CVD15519

OIL PUMP PRIMER DRIVE

PART #	DESCRIPTION
CVD44200	Oil Pump Primer Drive w/5/8" Shaft w/Bolt & Washer



CVD44200





CVD15622



CVD44438



CVD44439

CVD RACING PRODUCTS



CVD46001

HAT WASHERS/WASHERS

PART #	DESCRIPTION	ID
CVD44438	Standard 7/16"	0.453"
CVD44439	1.25" Hex 7/16"	0.453"
CVD44500	Standard 1/2"	0.51"
CVD44501	1.250" Hex 1/2"	0.515"
CVD44750	Standard 3/4"	0.765"
CVD45126	Steel Tab Washer fits CVD55125 Hub Chrysler	0.760"
CVD46001	1.250" Hex 1/2" w/Keylock Flange	0.515"
CVD50224	SBF Balance Washer	0.641"

CVD43005



CVD40300




CVD43220


CVD43100


CVD40211

SPACERS

PART #	DESCRIPTION	THICKNESS	OD	ID
CVD40211	Crank Pulley Spacer	0.125"	4.000"	1.250"
CVD40212	Crank Pulley Spacer	0.250"	4.000"	1.250"
CVD40215	SBC Drive Hub Spacer	0.375"	4.000"	1.000"
CVD40216	SBC Drive Hub Spacer	0.500"	4.000"	1.000"
CVD40300	Twin-Pin™ Crank Drive Spacer (Male Twin-Pin™ to Female Keylock™)	0.325"	2.500"	0.688"
CVD40301	Keylock™ Crank Drive Spacer (Male Keylock™ to Female Twin-Pin™)	0.325"	2.500"	0.813"
CVD40302	Keylock™ Crank Drive Spacer (solid version)	0.325"	2.500"	0.813"
CVD40308	Keylock™ Crank Drive Spacer	0.750"	2.480"	0.813"
CVD40309	Keylock™ Crank Drive Spacer	1.000"	2.480"	0.813"
CVD40310	Keylock™ Crank Drive Spacer (Male Keylock™ to Female Twin-Pin™)	0.450"	2.480"	0.813"
CVD42055	Pulley Spacer	0.385"	0.865"	0.590"
CVD43005	Twin-Pin™ / 16-19 Tooth Gears	0.050"	2.500"	1.280"
CVD43010	Twin-Pin™ / 21-23 Tooth Gears	0.050"	3.000"	1.280"
CVD43125	Twin-Pin™ Spacer	0.250"	2.470"	1.000"
CVD43150	Twin-Pin™ Spacer	0.500"	2.470"	1.000"
CVD43220	Crank Hub Spacer - Serpentine	0.250"	2.000"	1.000"
CVD43221	Crank Hub Spacer - Serpentine	0.188"	2.000"	1.000"
CVD43222	Crank Hub Spacer - Serpentine	0.375"	2.000"	1.000"
CVD43223	Crank Hub Spacer - Serpentine	0.500"	2.000"	1.000"
CVD55738	Ford Hub Spacer	0.375"	4.185"	0.515"
CVD62045	Alternator Spacer - Serpentine - Delco Shaft	0.385"	0.865"	0.671"


CVD40214

TYPES OF LOCATORS



EXTERNAL



INTERNAL



TAB LOCATOR

DRIVE HUBS

PART #	APPLICATION	DESCRIPTION	BOLT CIRCLE	LOCATER TYPE
CVD53000	SBC/BBC	Crank Trigger Hub Twin-Pin Keylock	3.200"	External
CVD53003	BBC	Crank Trigger Hub Twin-Pin Keylock	3.200"	External
CVD53100	SBC	2.5" OD Double V-Groove w/Helicoil	3.200"	Tab
CVD53224	SBF	Serpentine Drive Hub	3.300"	External
CVD53225	Dodge	6 Bolt Serpentine Drive Hub	2.826"	Tab
CVD53226	SBF	Serpentine Drive Hub	3.300"	Internal
CVD53304	SBC	Serpentine Drive Hub	3.200"	Tab
CVD53320	SBC	Serpentine Pro Hub	3.200"	Tab
CVD53324	SBF	Serpentine Pro Hub	3.300"	External
CVD53420	SBC	Extra Light Drive Hub	3.200"	Tab
CVD53440*	SBC	Extra Light Drive Hub	3.200"	Tab
CVD55124	SBC/SBF	Serpentine Drive Hub	3.200"/3.300"	Tab
CVD55126	SBC	Serpentine Drive Hub	3.200"	External
CVD55127	SBC/SBF	Serpentine Drive Hub w/BBC Adapter	3.200"/3.300"	External
CVD55704	Ford V6	Serpentine Drive Hub	3.180"	External
CVD55800	Chrysler	3 or 6 Bolt Drive Hub Adapter	2.825"	External

*Used on CVD96220 & CVD96221



CVD53320



CVD53324

DRIVE HUBS - HUBS LISTED BELOW ACCEPT CVD54000 & CVD44100 SHIMS

PART #	APPLICATION	DESCRIPTION	BOLT CIRCLE	LOCATER TYPE
CVD55110	SBC	Sheeve Drive Hub	3.200"	External
CVD55180	SBC	Sheeve Drive Hub	3.200"	External
CVD55180A	SBC	Crank Hub/Sheeve Assembly	1.245"	External
CVD55231	SBC	Sheeve Drive Hub	3.200"	External
CVD55700*	SBF	Sheeve Drive Hub	3.200"/3.300"	External
CVD55710*	SBF	Sheeve Drive Hub	3.200"/3.300"	External
CVD55790*	SBF	Sheeve Drive Hub	3.200"/3.300"	External

*All Ford hubs have an additional 3.200 bolt circle to accept sheeves and shims.
NOTE: Add "-A" to any of the above part numbers to order a complete assembly with sheeves and shims.



CVD55180

DRIVE HUB ADAPTERS & RELATED COMPONENTS

PART #	DESCRIPTION	THICKNESS
CVD40208	Tab Locator	.469"
CVD43051	Twin Pin Shim	.015"
CVD44100	Sheeve Shim	.015"
CVD44300	Big Block Hub to SB Pulley	.500"
CVD45232	Drive Adapter	.438" ID
CVD53001	SBC Crank Trigger Hub Adapter 1.246" ID	.322"
CVD53002	BBC Crank Trigger Hub Adapter 1.246" ID	.322"
CVD54000	Drive Hub Sheeve V-Groove Pulley Half	3.200" Bolt Circle
CVD55738	SBF Drive Hub Spacer .375"	3.300" Bolt Circle
CVD55800A	Chrysler Crank Assembly Pulley	.515"



CVD40208



CVD54000



CVD44100



CVD53000



CVD53003



CVD53304

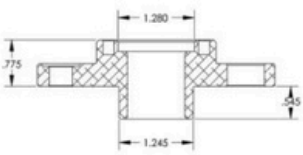

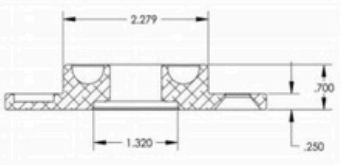

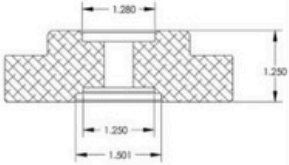



CVD55125



CVD55126



CVD55180

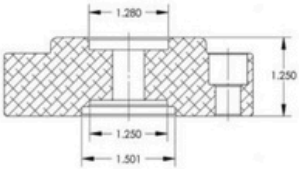

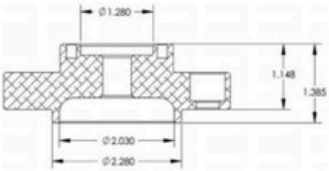

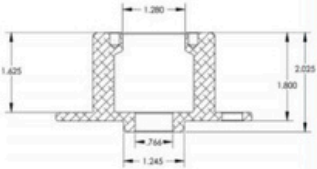



CVD45125



CVD45231



CVD45232



CVD53001



CVD53002



CVD55738



View the following pages for information on Mounting Brackets and Power Steering Pulleys



Power Steering Mounting Brackets



Power Steering Pulleys

CV RACING PRODUCTS' POWER STEERING PUMPS ARE AVAILABLE WITH OR WITHOUT PULLEY

Lo-Drag™ Race Series Pump - Designed for racing use only. Its proprietary internal design adjusts fluid volume/pressure for race car requirements: the result is lower operating temperatures (up to 150° cooler) and a savings of up to 5 hp in cumulative parasitic horsepower loss. Fully tested and used from Sprint Cup to Late Model Stock!

NOTE: A standard size (approx. 5" O.D. or smaller) power steering pulley should be used with the Lo-Drag™ race p/s pump. An oversized pulley not only adds weight and takes up more space, it could slow the pump down enough at low engine rpm to lose steering assistance.

EVERY CV RACING PRODUCTS' POWER STEERING PUMP INCLUDES THE FOLLOWING:

1) Lightweight aluminum Saginaw®-style body
2) Stock appearing
3) Direct bolt-in replacement - no special mounting brackets required
4) Lightweight CV billet aliuminum P/S pulley*
5) Special 1-piece, high-pressure, o-ring fittings eliminate leaks

**NOTE: Power Steering Pumps also available with pulley.*

GM SAGINAW® STEERING BOX FITTINGS

PART #	APPLICATION	DESCRIPTION	SIZE
CVF-77-222	GM 82-later Saginaw	Metric (-18mm)	-6AN Inlet
CVF-77-223	GM 81-earlier Saginaw	w/ O-ring	-6AN Inlet
CVF-77-224	GM 82-later Saginaw	Metric (-16mm)	-6AN Return
CVF-77-225	GM 81-earlier Saginaw	w/ O-ring	-6AN Return

These precision steel fittings install in GM Saginaw®-style Steering Boxes and have a -6AN male out fitting that allows you to install aftermarket power steering lines. There are two styles of fittings - both are required for each box. Fittings are available for 81-earlier and 82-later applications.





CV4250 - POWER STEERING RESERVOIR ASSEMBLY

The CV4250 Billet Aluminum Reservoir Assembly mounts directly onto the side of O.E. Saginaw®-style power steering pumps. (ex.-part# CV235N/P).

- 6061-T6 Billet Aluminum
- Smaller fluid capacity that is properly matched to today's power steering systems
- Weight reduction
- 4-Way adjustable reservoir positioning (12 & 6 o'clock or 10 & 4 o'clock)
- Grade 8 fasteners and washers included
- 3/8" NPT Allen Plug

NOTE: The CV4250-5 reservoir tank is pre-installed into the base using high strength (Red) thread lock. Users should regularly check and verify proper installation and seal of the tank to the base.

A non-vented cap comes standard on this assembly. The pressure measured in the reservoir or at the cap does not exceed 10psi. This small amount of pressure helps reduce cavitation.

KITS

PART #	DESCRIPTION
CV4250	P/S Reservoir Kit / Standard Brackets
CV4251	P/S Reservoir Kit / High Mount Brackets
CV4252	P/S Reservoir Kit / No Brackets

BODY

PART #	DESCRIPTION
CV4250-1	P/S Mount Body

TANKS

PART #	DESCRIPTION
CV4250-5	P/S Reservoir Tank 4.025"

CAPS

PART #	DESCRIPTION
CV4250-9-1	P/S Cap / Vented
CVC460	Hex Head Reservoir Cap / Vented

HARDWARE

PART #	DESCRIPTION
CV4250-BK	Bolt Kit Replacement For CV4250
CV4251-BK	Bolt Kit Replacement For CV4251
CV4252-BK	Bolt Kit Replacement For CV4252

BRACKETS & MOUNT

PART #	DESCRIPTION
CV4250-2	12 & 6 O'clock Bracket
CV4250-3	10 & 4 O'clock Bracket
CV4250-7	10 & 4 O'clock Bracket
CV4250-10	P/S Tank Mount

P/S PUMP SPACERS

PART #	DESCRIPTION
CV4250-250	P/S Pump Spacer .250"
CV4250-750	P/S Pump Spacer .750"
CV4250-1000	P/S Pump Spacer 1.000"

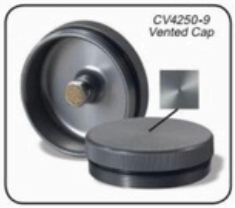

CV4250-9
Vented Cap

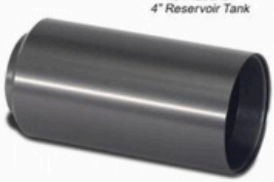

CV4250-5
4" Reservoir Tank



CV4250-10
Universal Tank Mount for CV4252 Can be mounted anywhere with a 3/8" bolt or stud.
**Recommended for the CV3224 Low Mount P/S Pump Kit*



CV4250-250
Power Steering Pump Spacer .250"

POWER STEERING ACCESSORIES

PART #	DESCRIPTION
CVD75000	Interchangeable Pulley Hub

Simply install the CV75000 adapter hub by using a puller/installer tool onto your power steering pump and attach the pulley to the hub with 6 screws. If you need to change from a V-Belt system to an S-Drive system (or vice versa), or simply need to change to a different pulley size, you simply remove the 6 screws. This new design eliminates the possibility of damaging a pulley, which is common when removing a "pressed-on" pulley.



CVD75000
Interchangeable Pulley Hub

NEW HIGHER TEMP FORMULA
EXTREME RACING LUBRICANTS™ POWER STEERING FLUID

CV Products offers Extreme Power Steering Fluid. A formulated power steering fluid for high temperature endurance racing events. Racing evolves on a daily basis. Engine builders have been running their engines much hotter to increase mileage and improve power. Some of this additional heat load is finding it's way in the power steering fluid.
EXT4251 is the power steering fluid of choice when the fluid temp approaches 250F and above. ATF cannot operate at this temperature. Extreme 4251 retains the excellent low expansion rate and lubricity racing requires.

SUPER CLEAN POWER STEERING FLUID

PART #	DESCRIPTION
EXT4251	Super Clean P/S Fluid, 1 quart

NOTE: Extreme Power Steering Fluid is recommended because of its low expansion rate.



CV3224

SBC POWER STEERING MOUNTING BRACKET KIT (BLOCK MOUNT)

- Designed for wet sump oil pump applications
- Designed to mount any standard Saginaw®-style P/S pump
- Driver Side - Block/Low Mount
- 6061-T6 billet aluminum, hard anodized
- Grade 8 Fasteners
- Spacers and washers included

NOTE: The CV3224 mounting bracket will work with a variety of pulley/belt drive systems, but has been designed specifically for use with the CVD93221 S-Drive™ serpentine drive system.



KIT INCLUDES:

REF #	PART #	DESCRIPTION	QTY.
1	CV3224-2	Nut Plate	1
2	CV3224-1	SBC Mounting Bracket	1
3	CV222NUT	Bracket Nut	1
4	CV3224-SP	Spacer	1
5	BLT-32X.500F	6/32" x .500" Button Head Allen Screw	4
6	BLTBF3.000B	5/16"-24 x 3.000" Hex Bolt	2
7	BLTCC2.000B	3/8"-16 x 2.000" Hex Bolt	2
8	BLTBL	5/16" AN Washer	2
9	BLTCL	3/8" AN Washer	2
10	BLTTCF1.750B	3/8"-16 x 1.750" Hex Bolt (when CV3224-SP spacer is not used)	2

CV RACING PRODUCTS

INSTALLATION OF CV3224

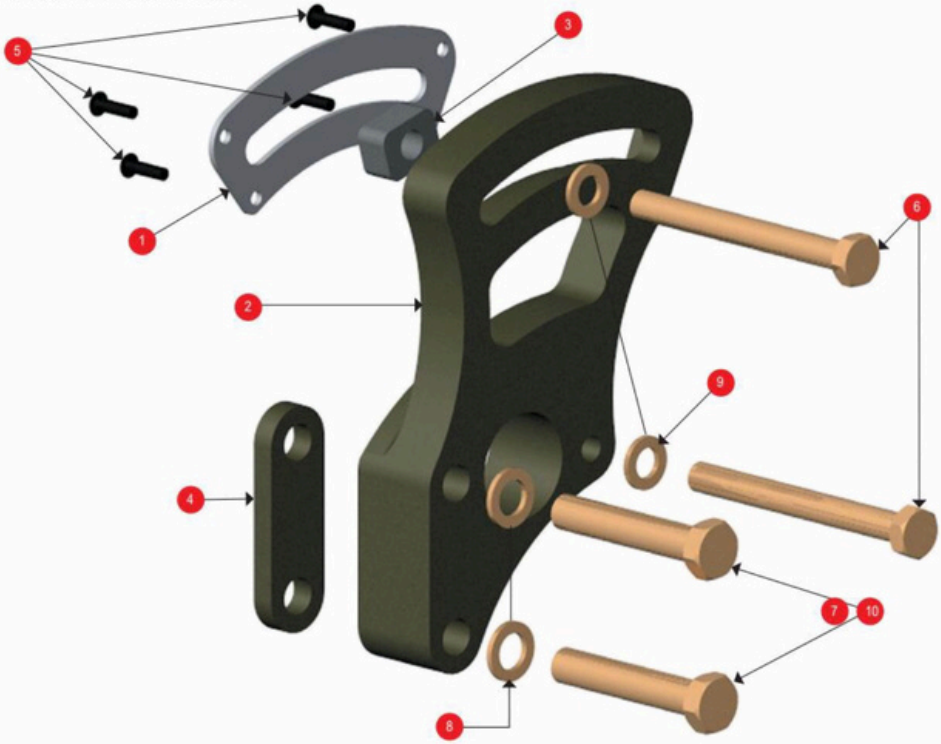

CV222

SBC POWER STEERING MOUNTING BRACKET KIT (HEAD MOUNT)

- Driver Side - Cylinder Head/High Mount
- Designed to mount any standard Saginaw®-style P/S pump
- 6061 T-6 billet aluminum
- Grade 8 fasteners
- Spacers and washers included (Extra length spacers included to allow exact spacing of bracket - length adjustment required.)



KIT INCLUDES:

REF #	PART #	DESCRIPTION	QTY.
1	CV222-MNT	SBC Mounting Bracket	1
2	CV222-SP	Spacer	3
3	CV222-NUT	Bracket Nut	1
4	BLTBF3.000B	5/16"-24 x 3.000" Hex Bolt	2
5	BLTCC3.500C	3/8"-16 x 3.500" Allen Bolt	3
6	BLTCL	3/8" AN Washer	3
7	BLTBL	5/16" AN Washer	2



CV RACING PRODUCTS

INSTALLATION OF CV222

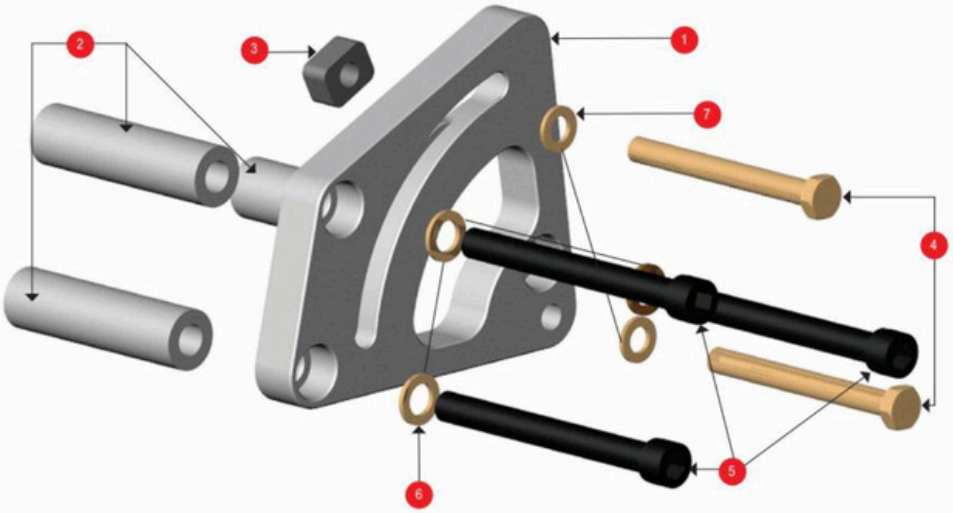

CV222-BBC

BBC POWER STEERING MOUNT KIT

- Driver Side - Cylinder Head/High Mount
- Designed to mount any standard Saginaw®-style P/S pump
- 6061 T-6 billet aluminum
- Grade 8 fasteners
- Spacers and washers included



KIT INCLUDES:

REF #	PART #	DESCRIPTION	QTY.
1	CV222-BBC	Bracket Only P/S BBC	1
2	CV222-NUT	P/S Bracket Nut	1
3	BLTCC1.250B	3/8"-16 x 1.250" Hex Bolt	2
4	BLTBF3.000B	5/16"-24 x 3.000" Hex Bolt	2
5	BLTCC1.oooC	3/8" x 1" Allen Bolt	1
6	BLTBN	5/16" Lock Washer	2
7	BLTCN	3/8" Lock Washer	2
8	BLTBL	5/16" AN Washer	1

CV RACING PRODUCTS

INSTALLATION OF CV222-BBC

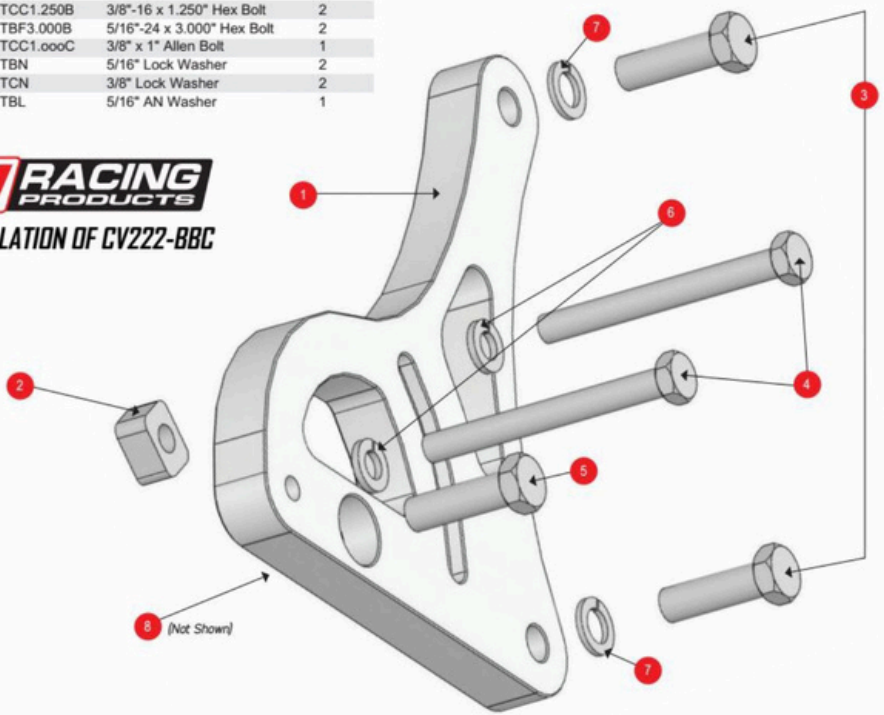

CV222-SBC-LTW

SBC LIGHTWEIGHT POWER STEERING MOUNTING BRACKET KIT (HEAD MOUNT)

- Driver Side - Cylinder Head/High Mount
- Designed to mount any standard Saginaw®-style P/S pump
- 6061-T6 billet aluminum
- Grade 8 fasteners
- Spacers and washers included (Extra length spacers included to allow exact spacing of bracket - length adjustment required)
- Captured slip-nut has no knurling on the mounting side of the nut to scar the slip channel and limit future belt adjustments

NOTE: The CV222-SBC-LTW mounting bracket will work with a variety of pulley/belt drive systems, but has been designed specifically for use with the CVD93220 S-Drive™ serpentine drive system.

KIT INCLUDES:

REF #	PART #	DESCRIPTION	QTY.
1	CV222-SBC-LTWV	SBC Lightweight Mounting Bracket	1
2	CV222-SBC-LTW-SP	3 PK Spacers 2.776"/.392"ID/.742"OD	1
3	CV222NUT	P/S Bracket Nut	1
4	BLTBN	5/16" Splitlock Washer	2
5	BLTBL	5/16" AN Washer	2
6	BLTBF3.000B	5/16"-24 x 3.000" Hex Bolt	2

CV222-SBC-LTW1

KIT INCLUDES:

REF #	PART #	DESCRIPTION	QTY.
1	CV222-SBC-LTWV	SBC Lightweight Mounting Bracket	1
2	CV222-NUT	P/S Bracket Nut	1
3	CV22222-D	Spacer .675"/.392"ID/.740"OD	3
4	CV22223-6	Spacer .950"/.392"ID/.740"OD	3
5	BLTBF3.000B	5/16"-24 x 3.000 Hex Bolt	2
6	BLTCC1.500C	3/8" x 1.5" Allen Bolt	1
7	BLTCC2.000B	3/8"-16 x 2.000 Hex Bolt	2
8	BLTBL	5/16" AN Washer	2
9	BLTBN	5/16" Splitlock Washer	2
10	BLTCL	3/8" AN Washer	3



CV222-SBC-LTW1 (shown)

CV222-SBF

SBF POWER STEERING MOUNTING BRACKET KIT (HEAD MOUNT)

- Driver Side - Cylinder Head/High Mount
- Designed for wet or dry sump Small Block Ford applications
- Designed to mount any standard Saginaw®-style P/S pump
- 6061-T6 billet aluminum
- Grade 8 fasteners
- Spacers and washers included



KIT INCLUDES:

REF #	PART #	DESCRIPTION	QTY.
1	CV222-SBF-1	SBF Mounting Bracket	1
2	CV222-SBF-2	Spacer	3
3	BLTTDC3.750B	7/16"-14 x 3.750" Hex Bolt	2
4	BLTDC3.250C	7/16"-14 x 3.250" Allen Bolt	1
5	BLTBF3.000B	5/16"-24 x 3.000" Hex Bolt	2
6	BLTDL	7/16" AN Washer	2
7	BLTBL	5/16" AN Washer	2
8	BLTBN	5/16" Splitlock Washer	2
9	CV222NUT	Bracket Nut	1

NOTE: The CV222-SBF mounting bracket will work with a variety of pulley/belt drive systems, but has been designed specifically for use with the CVD93222 S-Drive™ serpentine drive system.

NOTE: Fits "Windsor" Head



CV RACING PRODUCTS

INSTALLATION OF CV222-SBF

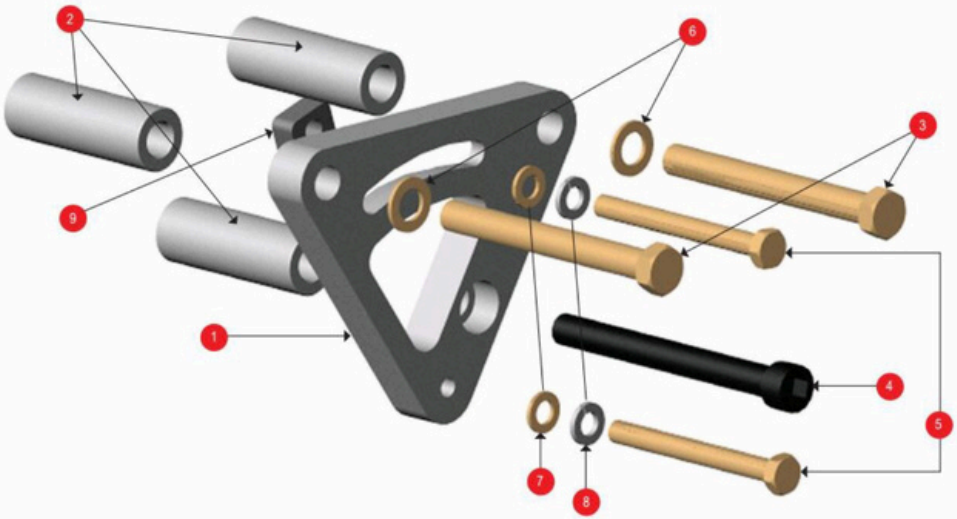

CV222-SBF-CRATE-KIT

SBF HEAD MOUNT P/S BRACKET FITS S347JR & D3475R

- Driver Side - Cylinder Head/High Mount
- Designed for wet or dry sump fits Ford Crate Engines
- Designed to mount any standard Saginaw®-style P/S pump
- 6061-T6 billet aluminum
- Grade 8 fasteners
- Spacers and washers included



KIT INCLUDES:

REF #	PART #	DESCRIPTION	QTY.
1	CV222-SBF-CRATE	SBF Head Mount P/S Bracket	1
2	CV222-SBF-CRATE-SP	SBF P/S Bracket Spacers	3
3	CV222-NUT	P/S Bracket Nut	1
4	BLTDC3.750B	7/16"-14 x 3.750" Hex Bolt	2
5	BLTDC3.250B	7/16"-14 x 3.250" Hex Bolt	1
6	BLTDL	7/16" AN Washer	3

CV RACING PRODUCTS

INSTALLATION OF CV222-SBF-CRATE KIT

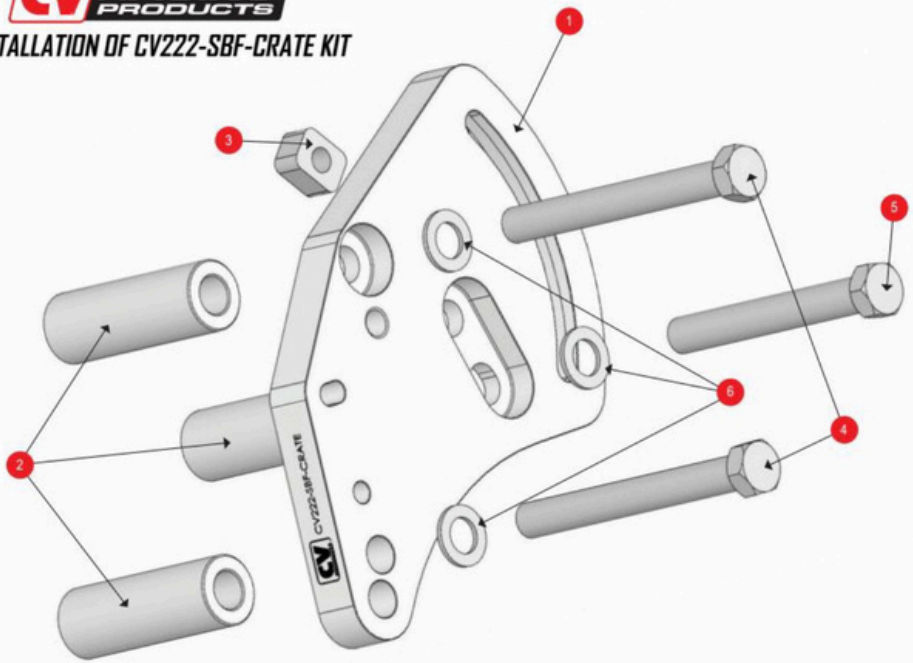

CV222-SBF-LTW

SBF POWER STEERING MOUNTING BRACKET KIT (HEAD MOUNT)



- Driver Side - Cylinder Head/High Mount
- Designed for wet or dry sump small block Ford applications
- Designed to mount any standard Saginaw®-style P/S pump
- 6061-T6 billet aluminum
- Grade 8 fasteners
- Spacers and washers included
- Captured slip-nut has no knurling on the mounting side of the nut to scar the slip channel and limit future belt adjustments

NOTE: The CV222-SBF-LTW mounting bracket kit will work with a variety of pulley/belt drive systems, but has been designed specifically for use with the CVD93222 S-Drive™ serpentine drive system (without engine plate).

NOTE: Fits "Windsor" Head

KIT INCLUDES:

REF #	PART #	DESCRIPTION	QTY.
1	CV222-SBF-LTWV	SBF Lightweight Mounting Bracket	1
2	CV222-SBF-2	Spacer	3
3	BLTDC3.250C	7/16"-14 x 3.250" Allen Bolt	3
4	BLTBF3.000B	5/16"-24 x 3.000" Hex Bolt	2
5	BLTDL	7/16" AN Washer	3
6	BLTBL	5/16" AN Washer	2
7	BLTBN	5/16" Splitlock Washer	2
8	CV222NUT	Bracket Nut	1

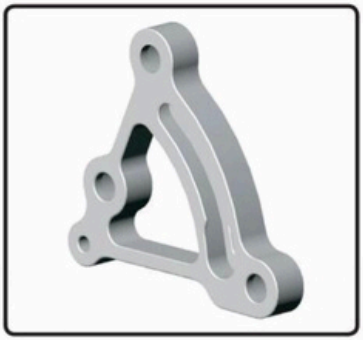

CV RACING PRODUCTS

INSTALLATION OF CV222-SBF

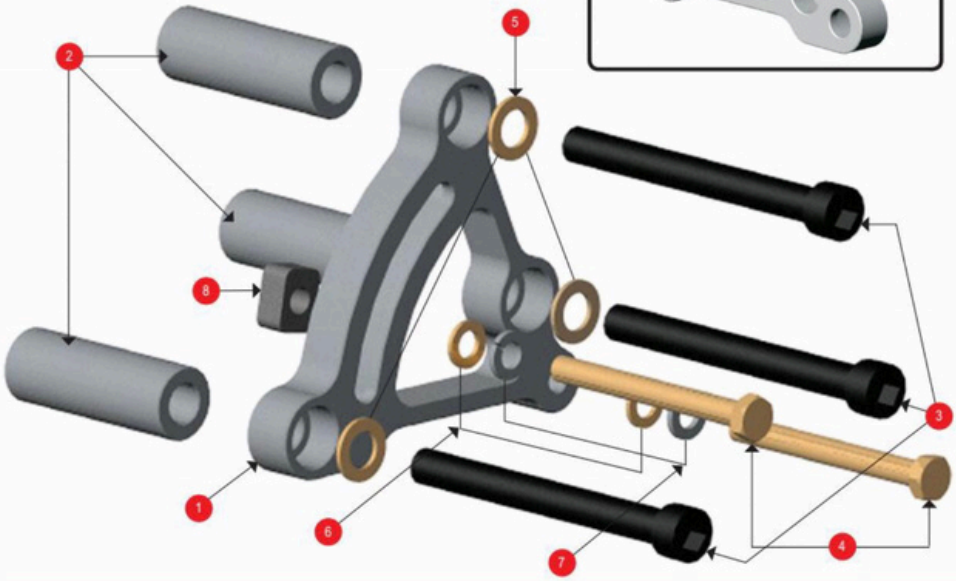

CV222-SBFY-LTW

SBF (YATES HEAD) LIGHTWEIGHT POWER STEERING MOUNTING BRACKET KIT (HEAD MOUNT)

- Driver Side - Cylinder Head/High Mount
- Designed for wet or dry sump Small Block Ford YATES applications
- Designed to mount any standard Saginaw®-style P/S pump
- 6061-T6 billet aluminum
- Grade 8 fasteners
- Spacers and washers included
- Captured slip-nut has no knurling on the mounting side of the nut to scar the slip channel and limit future belt adjustments

NOTE: The CV222-SBFY-LTW mounting bracket kit will work with a variety of pulley/belt drive systems, but has been designed specifically for use with the CVD93222 S-Drive™ serpentine drive system (without engine plate).

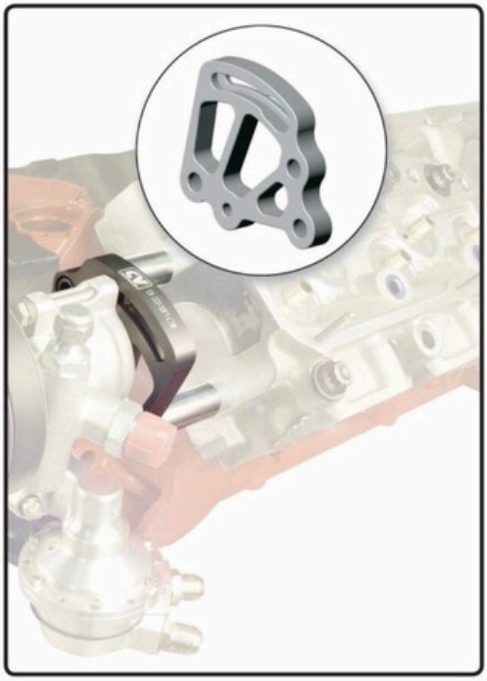

KIT INCLUDES:

REF #	PART #	DESCRIPTION	QTY.
1	CV222-SBFY-LTWV	SBF (Yates Head) Lightweight Mounting Bracket	1
2	CV222-SBFY-LTW-SP	Spacer	3
3	ARP200-8518	7/16" AN Washer	3
4	BLTBL	5/16" AN Washer	2
5	BLTBN	5/16" Splitlock Washer	2
6	CV222NUT	Bracket Nut	1
7	BLTDC3.250C	7/16"-14 x 3.250" Allen Bolt	3
8	BLTBF3.000B	5/16"-24 x 3.000" Hex Bolt	2

CV RACING PRODUCTS

INSTALLATION OF CV222-SBFY-LYW

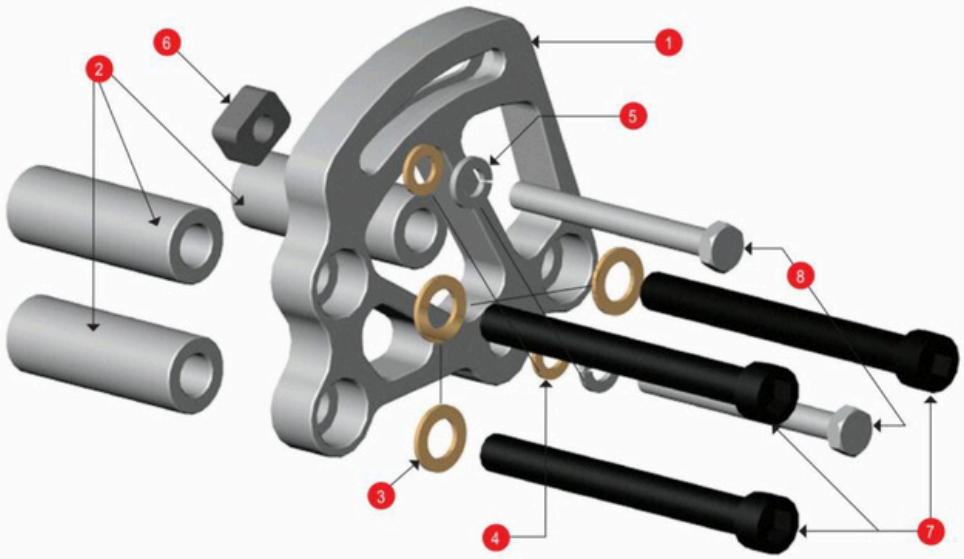

CV RACING PRODUCTS

INSTALLATION OF CV4250 (LOW MOUNT BRACKET)

NOTE: The CV4250 comes with two low mount brackets (CV4250-2 and CV4250-3) for mounting flexibility.

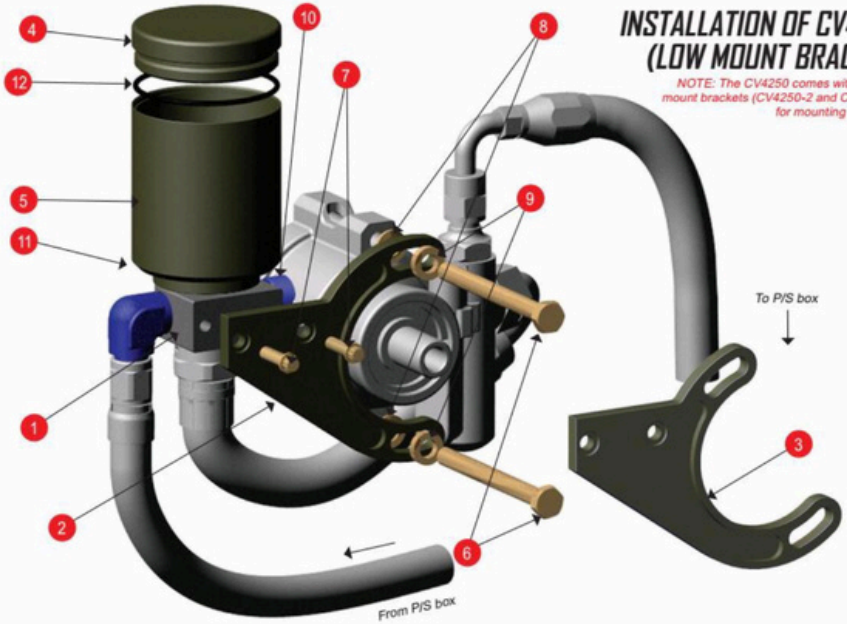

INSTALLATION OF CV4251 (HIGH MOUNT BRACKET)

NOTE: Optional high mount brackets (CV4250-6 and CV4250-7) are available upon request.

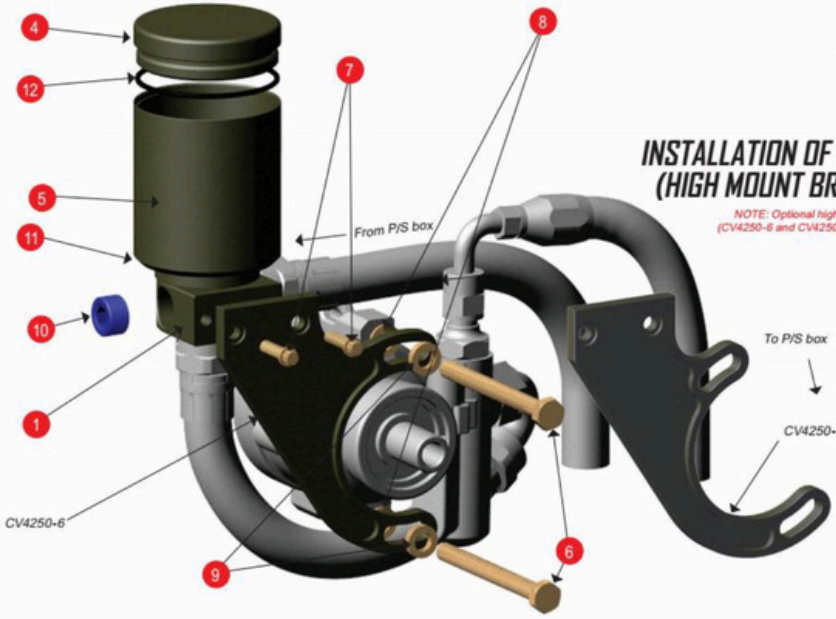

All CV Racing Products' Carburetor Spacers are made out of billet 6061-T6 aluminum. Billet carburetor spacers are what you should be looking for. Castings are generally heavier and can be porous which lead to vacuum leaks. The workmanship on our parts makes their owners proud. Our new lightweight spacers are really on a diet. Let's compare a 2" open spacer: the CV258 spacer weighs 3.15 lbs. while the CV258-LTW weighs 1.30 lbs. No contest right? OK but there is a market for customers who need to whittle on the thing. A CV258 can be angle milled, cut down to an odd height, used for a nitrous plate, etc. CV has 4-hole spacers too. Check out the complete spacer listings. We can also build custom spacers.
Contact your CV Sales Representative for more information.

CV RACING PRODUCTS

CUSTOM MACHINING AVAILABLE

We can custom machine carburetor spacers to your specs. Contact your CV Sales Representative for more information.

OPEN SPACERS

PART #	THICKNESS	2-HOLE 4-HOLE/OPEN	HOLE DIAMETER	CARB	LIGHTWEIGHT
CV166	0.500"	OPEN	-	750	-
CV173	0.625"	OPEN	-	750	-
CV174	0.750"	OPEN	-	750	-
CV175	0.875"	OPEN	-	750	-
CV159	1.000"	OPEN	-	390	-
CV158	1.000"	OPEN	-	750	-
CV158-LW*	1.000"	OPEN	-	750	Lightweight
CV240-LW*	1.250"	OPEN	-	750	Lightweight
CV266-LW*	1.625"	OPEN	-	750	Lightweight
CV267-LW*	1.875"	OPEN	-	750	Lightweight
CV250	1.750"	OPEN	-	750	-
CV250-LW*	1.750"	OPEN	-	750	Lightweight
CV255	2.000"	SOLID BLANK	-	N/A	-

**NOTE: Lightweight OD Machined Option*

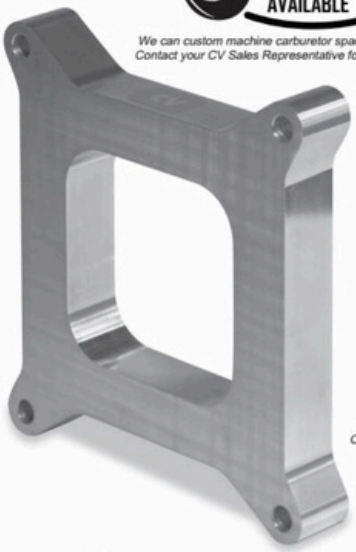

CV159

4-HOLE SPACERS

PART #	THICKNESS	2-HOLE 4-HOLE/OPEN	HOLE DIAMETER	CARB	LIGHTWEIGHT
CV156	1.000"	4	1.688"	750	-
CV156-750	0.750"	4	1.688"	750	-
CV167	0.500"	4	1.688"	750	-
CV172	0.500"	4	1.750"	750	-
CV157	1.000"	4	1.438"	390	-
CV271*	1.125"	4	1.750"	750	Lightweight
CV272*	1.250"	4	1.750"	750	Lightweight
CV273*	1.375"	4	1.750"	750	Lightweight
CV252-LW	1.750"	4	1.688"	750	Lightweight
CV274	1.500"	4	1.750"	750	Lightweight
CV275	1.625"	4	1.750"	750	Lightweight
CV276*	1.750"	4	1.750"	750	Lightweight
CV277*	1.875"	4	1.750"	750	Lightweight
CV257	2.000"	4	1.438"	390	-
CV256-LW*	2.000"	4	1.688"	750	Lightweight
CV299	2.000"	4	-	-	Tapered

**NOTE: Lightweight OD Machined Option*



CV299 Tilted Carb Spacer*

2-BBL SPACERS/ADAPTERS

PART #	THICKNESS	2-HOLE 4-HOLE/OPEN	HOLE DIAMETER	CARB	LIGHTWEIGHT
CV161	0.750"	2	1.500"	350	-
CV162	0.750"	2	1.688"	500	-

PHENOLIC ADAPTERS

PART #	THICKNESS	DESCRIPTION
CV160-P	1.000"	Holley 2BBL to Holley 4BBL Intake Adapter

We can laser etch your company logo on virtually any product in our warehouse. Make your engines identifiable with this easy customization option.

*LIGHTWEIGHT TAPER DESIGN EXCELLENT FOR DIRT LATE MODEL APPLICATION

- Compound angle design allows carburetor to sit flat and keep the jets covered during extreme downward suspension travel of the right front.
- 4150 1.750" 4 hole to open taper maximizes throttle response, low RPM torque and high RPM horsepower.
- Designed for left turn dirt late models.

These heavy-duty poly Carburetor Transport Cases are designed to protect your investment in a racing carburetor when storing or transporting it throughout the year. It also aids in keeping dirt and debris from getting inside of the carburetor.

CARBURETOR TRANSPORT CASES

PART #	DESCRIPTION
CVR/S101	2 BBL/ 4 BBL Carburetor Transport Case (Case only)
CVR/S102	Dominator Carburetor Transport Case (Case only)



CVR/S101
(Case Only)

The CV163-SC Carburetor Tuning Cover with a screen allows the engine to be cranked without the air cleaner or air filter in place. This makes it easier to access carburetor components such as the throttle linkage, idle adjusting screw, etc.

CARBURETOR COVERS

PART #	DESCRIPTION
CV163	Standard Carburetor Cover
CV163-SC	Carburetor Tuning Cover w/ Screen
CV164	Dominator Carburetor Cover



CV163



CV164



CV163-SC

ENGINE COMPONENTS

CV Products offers two styles of Epoxy for engine builders. A & B Epoxy is a two-part material that can be molded like putty, yet hardens to a steel-like consistency in just one hour. It does not shrink during hardening and is unaffected by solvents, oils, and gasoline. A & B Epoxy's maximum temperature limit is 250°, so it is ideal for repairing intake manifolds, cylinder head ports, and engine blocks. It can also be machined, drilled, and tapped.

NOTE: Shelf life is approximately 1 year.

Miracle Seal Epoxy is a two-part material with similar properties to A & B Epoxy, but with a higher temperature rating. It's ideal for repairing exhaust ports and other applications subject to high temperatures.



EPOXY *(NOT FOR USE IN ALKY ENGINES)*

PART #	DESCRIPTION
MO35560	A+B Epoxy
CV101	Miracle Seal Epoxy 907

The CV Racing Products' Lift Plates are made of 3/16" steel and will bolt onto the intake manifold for easy engine lifting. If you use a carburetor gasket, the lift plate will seal up the intake opening.

LIFT PLATES

PART #	DESCRIPTION
CV62670	Lift Plate (Holley/Quadrajet Type)



CV62670

This brushed aluminum Air Cleaner includes a standard style top and a base featuring a special radius design to maximize airflow into the carburetor. It accepts any common 14" O.D. air filter.

AIR CLEANER

PART #	DESCRIPTION
CV1510	Flat Air Cleaner Bottom LMSC
CVP-JR511*	Air Cleaner (top & bottom)
CVP-JR511-1	Offset Air Cleaner
CV1512	Flat Air Cleaner Top LMSC

NOTE: Air filter not included.









THROTTLE STOPS

PART #	DESCRIPTION
CV180	4 Barrel Throttle Stop
CV181	2 Barrel Throttle Stop

These Throttle Stops were designed for use on all four barrel Holley® carburetors (except Dominators). They mount permanently to the base plate with a single 10-32 screw in the original Holley® tapped hole. This is a "must have" part on carburetors with reduced cross-section throttle shafts. They are easily adjustable and have a permanent black powder coat finish.

The CV Racing Products' Insulator Plate insulates the mechanical fuel pump on Chevrolets and helps minimize heat transfer from the engine to the pump, reducing fuel temperature. Cooler fuel temperature results in increased horsepower.



ADJUSTING SCREW

PART #	DESCRIPTION
CV179	Fast Idle Adjusting Screw - Holley

This one-of-a-kind Adjusting Screw replaces the stock Fast Idle Adjusting Screw allowing precise and simple adjustment by hand.



THROTTLE LINKAGE BUSHING

PART #	DESCRIPTION
CV160	Throttle Linkage Bushing

This steel Throttle Linkage Bushing set allows the fitting of a 1/4" fastener to the 1/2" diameter hole found in the throttle linkage plate of Holley® carburetors.



FUEL PUMP INSULATOR PLATE

PART #	DESCRIPTION
CV147	Fuel Pump Insulator Plate

SPIN-FP-16-200

4 VANE FUEL PUMP, DIRECT DRIVE OR CABLE DRIVEN

FEATURES:

LIGHTWEIGHT

- Designed with the latest in CAD software allowing the lowest mass compact pump on the market

WEAR RESISTANT

- Gearless design eliminates "metal to metal" contact and every component is unleaded fuel compatible.

CONSISTENT PRESSURE

- CFD designed bypass circuit eliminates pressure spikes

ROBUST DESIGN FOR LONG SERVICE LIFE

- Preloaded double bearing shaft resists moment and thrust loads

ULTRA FAST PRIMING

- Great low RPM pumping efficiency enables quick dry starts. "Quick Fill" option allows a pressure head to prime the fuel system.



SPIN-16-200
NOTE: 8-8, 8-10 Fittings Required

SPIN-BK-4000

FUEL PUMP ADAPTER KIT FOR SPIN 4 VANE FUEL PUMP



SPIN-BK-4000
(Bolts not shown)

A WORD ON HOW WE PRESENT OUR FUEL FLOW DATA TO OUR CUSTOMERS

For decades now fuel pump manufactures have rated their fuel pumps on gallons per hour. Generally this number is representative of the capacity of the pump to move fuel thru it. The maximum amount of flow is achieved with no back pressure, or zero fuel pressure, to produce the highest flow number. The advertising department wants the biggest number possible. The reality is, carburetors and fuel injection systems require fuel pressure to function properly. Restricting the flow to create fuel pressure reduces the flow rate. What customers want to know is, will the pump provide enough fuel for my engine while at full throttle? CV has the answers and numbers you can believe so a proper fuel pump selection can be made with confidence.

Dyno operators all work with fuel flow rates in lbs/hr, not gallons per hour. This is because different fuels actually weight differently as their specific gravity varies from .700 for gasoline to .792 for methanol. Working in lbs/hr makes for easy math in determining if the engine is getting enough fuel. For gasoline divide the lbs/hr fuel flow by .5. For methanol no calculation is necessary. Here are two examples: The engine is targeted for 600 hp and will use gasoline. If the fuel flow is 325 lbs/hr @ the pressure you want to run then 325/.5 = 650hp. If you want to convert the engine to methanol then the fuel flow number in lbs/hr is actually the hp the engine makes. 650lbs/hr methanol = 650hp. These numbers work out this way because the A/F ratio for max power gasoline is 12.8 to 1 and for methanol it is 6 to 1.

Our fuel flow charts are rated in lbs/hr @ different fuel pressures. The chart has several lines across it, each representing a specific fuel pressure. Note, as the fuel pressure increases the flow rate goes down. This revelation is not apparent when only a large gallon per hour flow rate is advertised.

GALLONS PER HOUR				
PSI	4000	6000	8000	9000
6	-	-	-	-
7	118	110	126	128
8	100	94	105	103
9	90	76	84	81
10	57	53	58	56
11	40	35	45	43

LBS/HR FLOW				
PSI				
6	-	-	-	-
7	732.78	683.10	782.46	794.88
8	621.00	583.74	652.05	639.63
9	558.90	471.96	521.64	503.01
10	353.97	329.13	360.18	347.76
11	248.40	217.35	279.45	267.03

SPIN-MP-2508 DELIVERY PERFORMANCE FUEL PUMP FLOW TEST

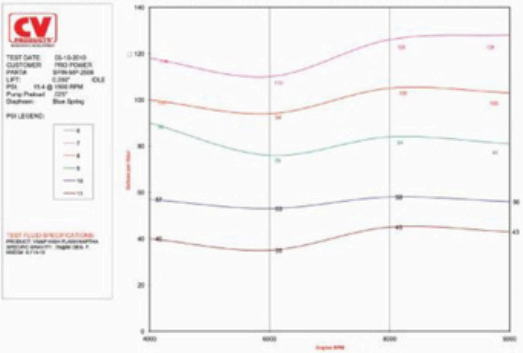



CV RACING PRODUCTS

SPIN-FR-1000
TWO PORT DEAD HEAD REGULATOR

- Lightest two-port regulator with multiple features
- Inlet pressure port
- Regulated pressure port
- Max inlet pressure 40 psi
- Compatible with all race fuels



SPIN-FR-1004 Shown

SPIN-FR-1004
FOUR PORT DEAD HEAD REGULATOR W/FITTINGS

- Four -6 outlet o-ring fittings included
- Clockable -10 inlet base allows for easy fuel line routing
- Rebuildable full billet construction
- Very compact and lightweight
- Compatible with all race fuels

SPIN-FR-1003
FOUR PORT DEAD HEAD REGULATOR (ONLY)



SPIN-FR-2000
BYPASS REGULATOR FOR CARBURETORS

- Lightest bypass regulator on the market
- Compatible with all race fuels
- Independent idle fuel pressure set with a jet
- Full throttle fuel pressure set with diaphragm adjuster
- Can be placed in front, rear, or in the middle of the fuel log

RATE OF ADJUSTMENTS
Pressure Adjusters - 6 to 10 lbs.

FEATURES:

LIGHTWEIGHT
- Designed to be the lightest, most compact regulators

LOW PRESSURE DROP
- High Flow design eliminates pressure variations

FAST RESPONSE
- Lightweight moving parts enables an ultra fast pressure response

DURABLE
- Hard coated to resist wear
- Top quality components

TWO GAUGE OPTIONAL PORTS
- Configure gauge to read either low or high pressure
- Only on SPIN-FR-1000

FUEL LOGS

PART #	DESCRIPTION
SPIN-FR-1000-4150	Regulator Assy. w/Fuel Log for 4150 Holley Carb, SS Hose
SPIN-FR-1000-4150-SS	Regulator Assy. w/Fuel Log for 4150 Holley Carb, SS Hose
SPIN-FR-1000-BRSWLL	Regulator Assy. w/Fuel Log for Braswell
SPIN-FR-1000-ULTRA	Holley Ultra Series Fuel Log
SPIN-FR-1001-4150	Regulator Assy. w/PFS Carb Fltr Fttg
SPIN-FR-1100	SPIN Rebuild Kit - 1000 Series
SPIN-FR-2000-4150	Bypass Regulator Fuel Log
SPIN-FR-2000-BRSWILL	Bypass Regulator Fuel Log for Braswell
SPIN-FR-2000-ULTRA	Holley Ultra Series Fuel Log
SPIN-FR-2001	SPIN Regulator Assy. for 4150 Holley Carb, SS Hose
SPIN-FR-2100	SPIN Rebuild Kit - 2000 Series

CV RACING PRODUCTS

SPIN-FR-1000-4150
DEAD HEAD REGULATOR FUEL LOG

- Lightest regulator/fuel log available
- Swivel fittings allow regulator rotation
- Regulator does not require additional mounting
- Supply & regulated pressure ports
- Compatible with all racing fuels
- Available in different bowl c/c lengths
- Fuel bowl fittings vastly improved, gaskets included

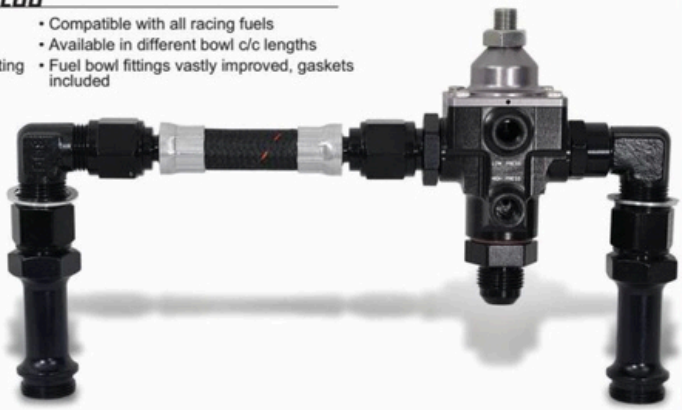

SPIN-FR-1100
REBUILD KIT



MOUNTING OPTIONS:

- Fuel Log: Mount the regulator directly between the two fuel bowls using both outlet ports.
- Remote Location: If a remote location is used for the regulator, the minimum line length from the regulator to the fuel log should be no less than 8 inches.

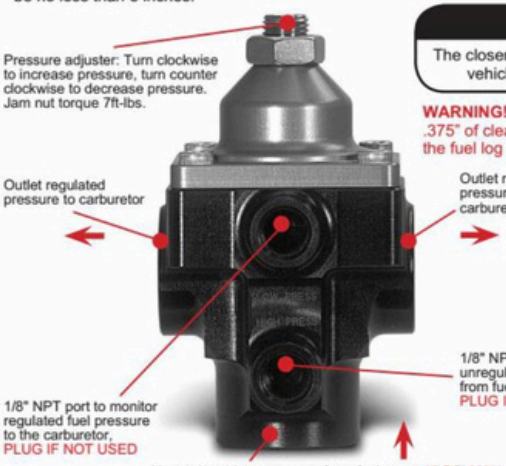

TECH TIP

The closer the regulator is to the carburetor the less fluctuations due to vehicle accelerations will be experienced in the fuel pressure.

WARNING! To prevent throttle hang up, make sure there is at least a .375" of clearance between the secondary throttle linkage and any part of the fuel log including the regulator.

ACCESSORY FITTINGS FOR REGULATOR:

SPIN-OR10AN10
SPIN-OR8AN10
SPIN-OR8AN6
SPIN-OR10AN8
SPIN-OR8AN8
SPIN-OR8P



SPIN-OR10AN10



SPIN-OR8AN10

SPIN-FR-2000-4150-BRASWELL

BYPASS REGULATOR FUEL LOG

- Lightest regulator/fuel log available
- Regulator can be mounted on either end or between float bowls
- Regulator does not require addtional mounting
- Regulated pressure port
- Compatible with all racing fuels
- Available in different bowl c/c lengths
- Fuel bowl fittings vastly improved, gaskets included
- Center fuel return port
- Jam nut torque 7ft-lbs

ACCESSORY FITTINGS FOR REGULATOR:

SPIN-OR8AN10
SPIN-OR8AN6
SPIN-OR8AN8
SPIN-OR8P



CVF-OR8AN10

SPIN-FR-2100
REBUILD KIT



BYPASS REGULATOR SETTINGS

Adjustment of this regulator is different than a dead head regulator. Install a fuel pressure gauge such that the driver can clearly see it while on the track. At full throttle observe the fuel pressure gauge. If the pressure needs adjustment return to the pits and re-adjust. Return to the track and retest. Correct fuel pressure cannot be done while idling in the pits. When desired pressure is achieved tighten the jam nut and do not re-adjust. IDLE FUEL PRESSURE is achieved by changing the holley jet located underneath the top housing. The larger the jet the lower the idle pressure. This does not affect full throttle fuel pressure.

PRESSURE ADJUSTER:

Turn clockwise to increase pressure. Turn counter clockwise to decrease pressure. Jam nut torque 7ft-lbs.

HOLLEY MAIN JET

To control idle pressure you can change the jet size. Note: change at least 10 jet sizes at a time. Typically alcohol engines need less idle pressure. The target should be in the 3-5psi range.

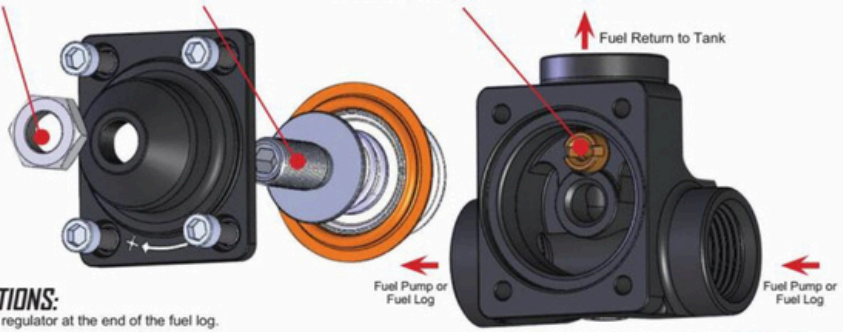

Unregulated inlet pressure from fuel pump 45 PSI MAX

MOUNTING OPTIONS:

- Fuel Log: Mount the regulator at the end of the fuel log.
- Remote Location: on top of the fuel tank with the center outlet pointed into the tank.

RADIATOR CAPS

High pressure caps are available in the large style and now in the new smaller size caps as well. The new multi-layer steel gaskets are doing a much better job of sealing the heads to the block. As a result engine builders can now run higher water system pressures which in turn allows higher water temperatures before the system will boil the water. These high pressure caps from CV were designed for this purpose.

PART #	DESCRIPTION	PSI RATING
CV714-2832	Large Cap	28-32
CV714-3842	Large Cap	38-42



CV714-2125

MECHANICAL FANS

PART #	DESCRIPTION
CV1515	15" 4 blade fan 32 deg pitch
CV1518	18" 4 blade fan 32 deg pitch
CV1519	19" 4 blade fan 32 deg pitch

NOTE: All fans come with reinforcement plates.


CV1515

FAN SPACERS

CV Racing Products' Billet Aluminum Fan Spacers make mechanical cooling fan spacing and installation simple. CNC-machined from 6061-T6 aluminum, these spacers are available in 1/4" increments and include the hardware required to install on the water pump and to install the fan.

PART #	DESCRIPTION
CV100200	2.00" Fan Spacer
CV100225	2.25" Fan Spacer
CV100250	2.50" Fan Spacer
CV100275	2.75" Fan Spacer
CV100300	3.00" Fan Spacer



WATER PUMPS

PART #	DESCRIPTION
CVWP-5625	Aluminum SBC Water Pump 5.625"
CVWP-5795	Aluminum SBC Water Pump 5.795"

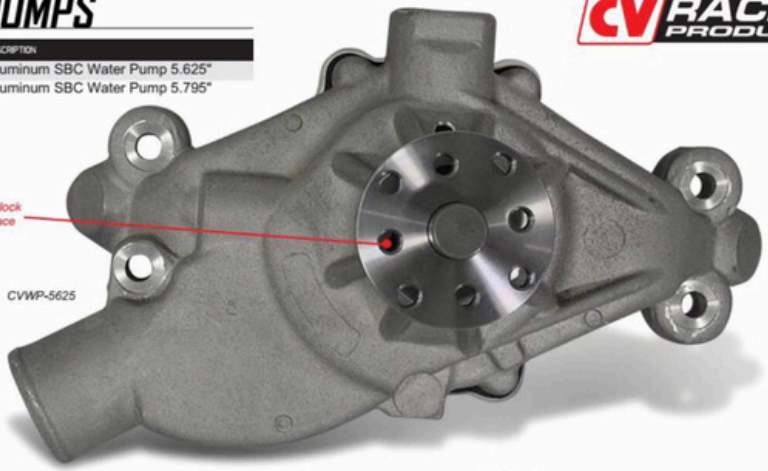



These 6061-T6 Billet Aluminum Water Pump Spacers are ideal for a variety of uses, including belt drive applications and basic water pump pulley alignment.

WATER PUMP SPACER KITS

PART #	DESCRIPTION
CVWP10732	BBC W/P Spacer .250"
CVWP10733	BBC W/P Spacer .375"
CVWP10734	BBC W/P Spacer .500"
CVWP10739	SBC W/P Spacer .250"
CVWP10740	SBC W/P Spacer .375"
CVWP10741	SBC W/P Spacer .500"
CVWP11739	SBC W/P O-Ring Spacers

PART #	DESCRIPTION
CVWP11740	SBC W/P O-Ring Spacers
CVWP11741	SBC W/P O-Ring Spacers
CVWP11743	SBC W/P O-Ring Spacers
CVWP12739	SBC Blank W/P Spacers
CVWP12740	SBC Blank W/P Spacers
CVWP13741	SBC W/P Spacers w/-12 Male
CVWPOR	O-Ring Kit for W/P Spacers





CV Racing Products' Billet Thermostat Housings are CNC-machined from 6061-T6 aluminum and available in a variety of configurations with o-ring gasket seal.

THERMOSTAT HOUSINGS

PART #	DESCRIPTION	THICKNESS	OVERALL HEIGHT
CV702	-16 AN Male	.310"	1.400"
CV702-20	-20 AN Male	.310"	1.400"
CV705	-16 AN Male w/ (2) 3/8" Female NPT Auxilliary Ports	1.220"	2.125"
CV706	-20 AN Male w/ (2) 3/8" Female NPT Auxilliary Ports	1.220"	2.300"
CV707	-16 AN Male 90° Swivel	.350"	2.400"
CV708	-20 AN Male 90° Swivel	-	-
CV568-227	O-Ring for Thermostat Housings	-	-
CV711	-16 Ford w/ O-Ring Groove 289-351W	-	-



SPACERS

PART #	DESCRIPTION	THICKNESS
CV704	Spacer w/(2) 3/8" Female NPT Auxilliary Ports	1.000"
CV704-1/2P	Spacer w/(2) 1/2" Female NPT Auxilliary Ports	-



These precision Block-Off Plates replace the stock SBC oil filter mount and are required when using aftermarket oiling system components. CNC-machined from 6061-T6 billet aluminum and hard anodized, each block-off plate includes mounting bolts and premium o-ring seals. The CV780 is ideal for wet sump applications using a remote accessory, such as a remote oil filter mount or oil cooler. The CV781 (inlet only) may be used for dry pump applicatons that use the stock rear main oiling passage. The CV782 is ideal for front-oiler applications using a remote oil filter mount.

OIL FILTER BLOCK-OFF PLATES

PART #	DESCRIPTION
CV780	2 Hole In / Out -10 AN
CV781	1 Hole Inlet Only -10 AN
CV782	1 Hole Outlet Only -12 AN



OIL TEMPERATURE ADAPTER - INLINE

PART #	DESCRIPTION
CV739-10	10 AN Inlet/Outlet 1/2" NPT Thread
CV739-12	12 AN Inlet/Outlet 1/2" NPT Thread

This Valve Cover Oiler Adapter fits -12AN oil lines (in-line) and features two 1/8" pipe holes to divert oil to valve covers with integral oilers for valve springs. It is CNC-machined from 6061-T6 billet aluminum and anodized for long life.



VALVE COVER OILER ADAPTER - INLINE

PART #	DESCRIPTION
CV730-12	Valve Cover Oiler Adapter 1/8"



Ideal for virtually any wet sump or dry sump application, CV Racing Products' Lightweight Remote Oil Filter Mounts allow you to choose the exact location for your oil filter. They also provide convenient access for oil filter inspections and replacement. Simply block off the stock oil filter mount on the engine block (use block off plates) and plumb the appropriate oil lines to the remote mount. Each lightweight remote oil filter mount is CNC-machined from 6061-T6 billet aluminum. The tapered entry on the inboard mounting surface has been revised for greater flow efficiency.

Left and right side inlet ports provide greater mounting flexibility. The unused inlet may either be plugged or used with a temperature probe adapter (CV743-12: available separately) to install an oil temperature gauge probe. Both inlet and outlet ports use -12AN short thread fittings. A 1/8" pipe thread port in the front of mounts is also provided to accept an oil pressure gauge fitting. CV Racing Products' Lightweight Remote Oil Filter Mounts are available for all common styles/sizes of racing oil filters.



LIGHTWEIGHT REMOTE OIL FILTER MOUNTS

PART #	USE W/FRAM	USE W/WIX	THREAD SIZE
CV745	HP-1	WIX51515	3/4"-16
CV746	HP-4	WIX51061R	13/16"-16
CV747	HP-6	WIX51222R	1-1/2"-12
CV748	AC/PUROLATOR	WIX57007R	1-1/2"-16
CV749	CVPH3519A	WIX51268R	1-1/8"-16





CV RACING PRODUCTS

ACCESSORIES

PART #	DESCRIPTION
CV745-1	3/4"-16 / Thread Insert
CV746-1	13/16"-16 / Thread Insert
CV747-1	1-1/2"-12 / Thread Insert
CV749-1	1-1/8"-16 / Thread Insert
CV743-10	10AN Oil Temperature Probe Adapter
CV743-12	12AN Oil Temperature Probe Adapter
CVF1010	Oil Inlet Fitting / Steel -10 Oring Boss to -10 AN Male (3.375" x -10 7/8"-14)
CVF1012	Oil Inlet Fitting / Steel -10 Oring Boss to -12 AN Male (3.375" x -10 7/8"-14)
CVF-4-4	-40RB/-4 Oil Pressure Fitting
CVF-3-4	-3 ORB / -4 Oil Pressure Fitting



CV743-10



CVF-3-4



CVF1012

FRAM RACING

OIL FILTERS

PART #	DESCRIPTION
CVHP-6A	FRAM NASCAR Filter 1-1/2"-12
CVHP-4	FRAM Oil Filter PH13 (TALL)
CVHP-1	FRAM Oil Filter PH8A (TALL)
CVHPGC1	Fuel Filter Replacement Cart
CVHP-14	FRAM HP-14 Oil Filter
CVHP-5	FRAM Oil Filter F/AMC



O-RING FITTINGS

PART #	DESCRIPTION
SPIN-OR04AN04	Short ORB-04/AN-04
SPIN-OR06AN06	Short ORB-06/AN-06
SPIN-OR06AN08	Short ORB-06/AN-08
SPIN-OR08AN06	Short ORB-08/AN-06
SPIN-OR08AN08*	Short ORB-08/AN-08
SPIN-OR08AN10**	Short ORB-08/AN-10
SPIN-OR10AN08	Short ORB-10/AN-08
SPIN-OR10AN10	Short ORB-10/AN-10
SPIN-OR10AN12	Short ORB-10/AN-12
SPIN-OR10P	ORB Port Plug, -10 Short
SPIN-OR12AN10	Short ORB-12/AN-10
SPIN-OR12AN12	Short ORB-12/AN-12
SPIN-OR12AN16	Short ORB-12/AN-16
SPIN-OR12P	ORB Port Plug, -12 Short
SPIN-OR16AN12	Short ORB-16/AN-12
SPIN-OR16AN16	Short ORB-16/AN-16

**NOTE: Used in fuel pump outlet*
***NOTE: Used in fuel pump inlet*



OIL FILTER ADAPTER

This revolutionary product installs as a direct replacement on stock SBC. This oil filter adapter increases the oil flow rate of stock oiling systems; by using a filter with double the flow rate as a "stock" filter.

NOTE: This product requires filter part # WIX51268R or AC PF897F

PART #	DESCRIPTION
SPIN-OF-2000	SBC Oil Filter Adapter

HAS BEEN REPORTED TO REDUCE OIL TEMPERATURE BY REDUCING THE PRESSURE DROP ACROSS THE FILTER.

WIX Filters located on page 319.



WIX FILTERS Racing

WIX51268R



KITS

FRONT COVER BOLT

PART #	DESCRIPTION
CV620	1/4" x 1/2" Bolt w/12pt. Head w/AN Washer

HEADER BOLT

PART #	DESCRIPTION
CV614	3/8" x 1" 12pt. Head 12 per kit

VALVE COVER STUD

PART #	DESCRIPTION
CV630	1-1/4" x 1/4" Allen Studs w/Nylock Nuts (SBC) 8 pcs.

OIL PAN BOLT & STUD

PART #	DESCRIPTION
CV485-BOLT	Seal Adapter Bolt
CV640	12pt. Bolt w/AN Washers
CV641	Hex Bolts w/Spinlock Head

INTAKE BOLT

PART #	DESCRIPTION
CV650	3/8" x 1-1/4" 12pt. Head w/Super Washers

FUEL PUMP BOLT

PART #	DESCRIPTION
CV660	3/8" x 1-1/4" 12pt. Head w/AN Washers

WATER PUMP BOLT

PART #	DESCRIPTION
CV665	12pt. Head Bolts w/AN Washers

SPINLOCK HEX HEADS

PART #	SIZE	LENGTH
BLTAC.500G	1/4"-20	0.500"
BLTBC.625G	5/16"-18	0.625"

SPINLOCK NUTS

PART #	DESCRIPTION
BLTACQ	1/4"-20 Nuts
BLTAFQ	1/4"-28 Nuts
BLTBCQ	5/16"-18 Nuts
BLTBFQ	5/16"-24 Nuts

NYLON NUT INSERTS

PART #	DESCRIPTION
BLTACT	1/4"-20 Nuts
BLTAFT	1/4"-28 Nuts
BLTBCT	5/16"-18 Nuts
BLTBFT	5/16"-24 Nuts
BLTCCT	3/8"-16 Nuts
BLTCFT	3/8"-24 Nuts

SUPER WASHERS

PART #	DESCRIPTION
BLTAK	1/4" Super Washers
BLTBK	5/16" Super Washers
BLTCK	3/8" Super Washers

AN WASHERS

PART #	DESCRIPTION
BLTAL	1/4" AN Washers
BLTBL	5/16" AN Washers
BLTCL	3/8" AN Washers
BLTDL	7/16" AN Washers
BLTEL	1/2" AN Washers



Front Cover Bolt Kit



Nylon Nut Inserts



AN Washers



12PT Bolts



Hex Bolts

12PT BOLTS

PART #	SIZE	LENGTH
BLTAC.500A	1/4"-20	0.500"
BLTAC.750A	1/4"-20	0.750"
BLTAC1.000A	1/4"-20	1.000"
BLTBC.625A	5/16"-18	0.625"
BLTBC.750A	5/16"-18	0.750"
BLTBC1.000A	5/16"-18	1.000"
BLTBC3.000A	5/16"-18	3.000"
BLTBF.750A	5/16"-24	0.750"
BLTBF1.000A	5/16"-24	1.000"
BLTCC.750A	3/8"-16	0.750"
BLTCC1.000A	3/8"-16	1.000"
BLTCC1.250A	3/8"-16	1.250"
BLTCC1.500A	3/8"-16	1.500"
BLTCC1.750A	3/8"-16	1.750"
BLTCC2.500A	3/8"-16	2.500"
BLTCC2.750A	3/8"-16	2.750"

HEX BOLTS

PART #	SIZE	LENGTH
BLTCC.750B	3/8"-16	0.750"
BLTCC1.000B	3/8"-16	1.000"
BLTCC1.500B	3/8"-16	1.500"
BLTCC2.000B	3/8"-16	2.000"
BLTCC2.750B	3/8"-16	2.750"
BLTCC3.500B	3/8"-16	3.500"

PART #	SIZE	LENGTH
BLTCC3.750B	3/8"-16	3.750"
BLTCC4.000B	3/8"-16	4.000"
BLTCC5.000B	3/8"-16	5.000"
BLTTCF1.750B	3/8"-16	0.750"
BLTTDC5.000B	7/16"-14	5.000"

ALLEN BOLTS

PART #	SIZE	LENGTH
BLTBC1.250C	5/16"-18	1.250"
BLTBC1.500D	5/16"-18	1.500"
BLTBC.750C	5/16"-18	0.750"
BLTCC1.000C	3/8"-16	1.000"
BLTCC1.500C	3/8"-16	1.500"
BLTCC2.250C	3/8"-16	2.250"
BLTCC2.750C	3/8"-16	2.750"
BLTCC.750C	3/8"-16	0.750"
BLTCF1.250C	3/8"-24	1.250"
BLTCF1.500C	3/8"-24	1.500"
BLTCF2.000C	3/8"-24	2.000"
BLTCF2.250C	3/8"-24	2.250"
BLTCF2.500C	3/8"-24	2.500"
BLTCF3.000C	3/8"-24	3.000"



ALLEN STUDS

PART #	SIZE	LENGTH
BLTAC1.250D	1/4"-20	1.250"
BLTAC1.500D	1/4"-20	1.500"
BLTBC 2.500D	5/16"-18	2.500"
BLTBF1.000D	5/16"-24	1.000"
BLTBF1.500D	5/16"-24	1.500"
BLTCC1.500D	3/8"-16	1.500"
BLTCF1.250D	3/8"-24	1.250"



CV FITTINGS

PART #	DESCRIPTION
CVF-AN-06-04	-6AN Female to -4AN Male
CVF-AN-06-08	-6AN Female to -8AN Male
CVF-AN-08-04	-8AN Male to -4AN Male
CVF-AN-08-06	-8AN Male to -6AN Male
CVF-AN-08-10	-8AN Male to -10AN Male
CVF-AN-10-08	-10AN Female to -8AN Male
CVF-AN-10-12	-10AN Female to -12AN Male
CVF-AN-12-10	-12AN Female to -10AN Male
CVF-AN-12-16	-12AN Female to -16AN Male
CVF-AN-16-12	-16AN Female to -12AN Male
CVF-AN20-16D	-20AN Female to -16AN Male
CVF-1010	-10 O-Ring 10 -10AN Fitting
CVF-1012	-10 O-Ring 10 -12AN Fitting

NOTE: All CV Racing Products' Fittings are aluminum unless specified otherwise.



WELD BUNGS

PART #	DESCRIPTION
CVF-AN-04	-4AN Male Weld Bung
CVF-AN-06	-6AN Male Weld Bung
CVF-AN-06F	-6AN Female Weld Bung
CVF-AN-06S	-6AN Male Weld Bung (Steel)
CVF-AN-08	-8AN Female Weld Bung
CVF-AN-08F	-8AN Female Weld Bung
CVF-AN-08S	-8AN Male Weld Bung (Steel)
CVF-AN-10	-10AN Male Weld Bung
CVF-AN-10F	-10AN Female Weld Bung
CVF-AN-10S	-10AN Male Weld Bung (Steel)
CVF-AN-12	-12AN Male Weld Bung
CVF-AN-12F	-12AN Female Weld Bung
CVF-AN-12S	-12AN Male Weld Bung (Steel)
CVF-AN-16	-16AN Male Weld Bung
CVF-AN-16F	-16AN Female Weld Bung
CVF-AN-16S	-16AN Male Weld Bung (Steel)
CVF-AN-20	-20AN Male Weld Bung
CVF-NPT-.125	1/8" NPT Female Weld Bung
CVF-NPT-.250	1/4" NPT Female Weld Bung
CVF-NPT-.375	3/8" NPT Female Weld Bung
CVF-NPT-.500	1/2" NPT Female Weld Bung
CVF-NPT-.750	3/4" NPT Female Weld Bung
CVF-NPT-1.000	1" NPT Female Weld Bung

CV Racing Products' Weld Bungs are available in a variety of -AN and pipe thread sizes, in both steel and aluminum. These fittings are ideal for a wide variety of fabrication uses.





BARNES
DRY SUMP OIL SYSTEMS

From NASCAR to USAC and WoO sprint car applications, Barnes has continually focused on emerging trends in engine and oil system development since the early 1960's. Barnes' newest 9017-Series represents the pinnacle in high efficiency dry sump oil pumps. In just the past few years, these pumps have won championships in an amazing variety of applications, including Winston Cup, World of Outlaws, and NHRA Pro Stock. Barnes' oil systems support increased power levels generated by today's most advanced racing engines, while delivering reliable, trouble-free operation season after season. CV Products is proud of our cooperative development partnership with Barnes, one of racing's premiere oil delivery system experts!

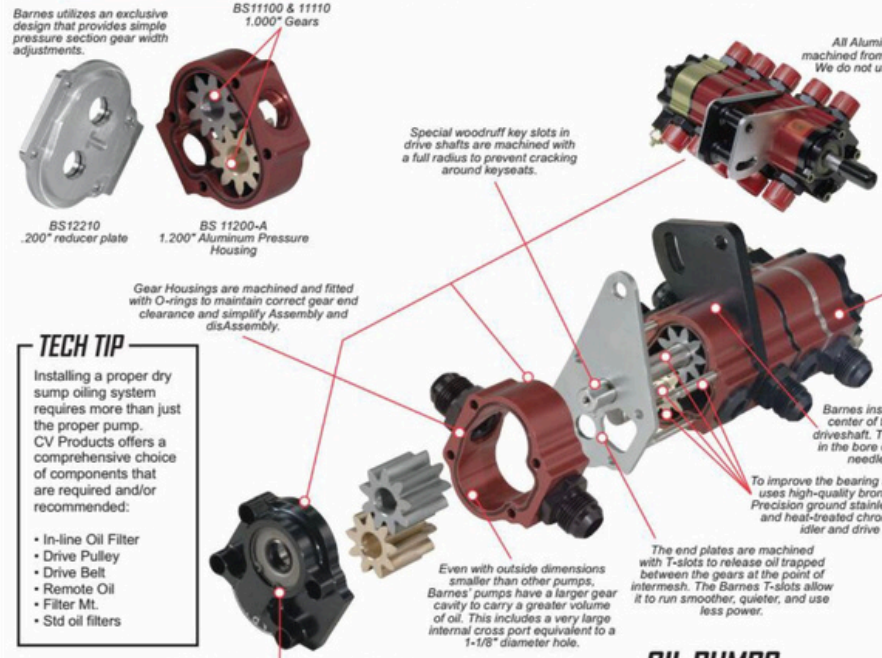

TECH TIP

Installing a proper dry sump oiling system requires more than just the proper pump. CV Products offers a comprehensive choice of components that are required and/or recommended:

- In-line Oil Filter
- Drive Pulley
- Drive Belt
- Remote Oil
- Filter Mt.
- Std oil filters





The 9017 and its derivatives have set the standard for professional racing dry sump oil pumps. This oval track series meets and exceeds the efficiency and vacuum requirements of today's most demanding engine builders. Testing and customer feedback has proven that it is more efficient, uses less horsepower and draws an average of 2-5" more vacuum than any other gear pump available. Five-stage 9017 pumps meet NASCAR's 9.5" o/a length limit and have been used by the past five consecutive Winston Cup champions, proving its greater quality, performance and reliability in competition! Available in custom applications.

OIL SYSTEM BYPASS

Certain Barnes Oil Pumps can be ordered without a bypass section.

The 9025-series Drag Race oil pumps are based on the 9017. Available with tighter tolerance gear sections and additional bearing supports, this pump is specifically designed for drag race engines like Pro Stock, Comp Eliminator, and P/S Truck. Used by both Pro Stock and P/S Truck champions, Barnes pumps are more reliable, easier to use, and achieve higher vacuum ratings than other brands!

NEW LIGHTWEIGHT OPTION

for qualifying or drag race applications only! Lightened drive and/or idler gears and gun-drilled idler shafts are available upon special request, removing 3 pounds or more from the net pump weight. This option is not available for endurance applications.

OIL PUMPS

2 STAGE	
BS9017-2B-SBC	Oil Pump/2stg
5 STAGE	
BS9014-5B1	SBC w/1" Gears
BS9015-5B1-NB	SBC No Bypass .800" Press Gears
BS9017-5B1	SBC 1.200" Pressure Forward Mount
BS9017-5B2	SBC 1.200" Pressure
BS9017-5F2	SBF
BS9025-RP1.0	BBC 1.000" Press
6 STAGE	
BS9014-6F2	SBF 6 Stage
BS9017-6B1-RP	SBC Rotor Pump
BS9017-6D1	Oil Pump
BS905	O-Ring for Bypass Plug

CUSTOM MACHINING

With their unique and simple modular design, Barnes dry sump oil pump components are interchangeable and easily adapted to most any dry sump application. Barnes and CV Products offer several standard body/gear widths and shaft lengths to assemble a pump to meet your requirements. CV Products and Barnes have also co-developed 3-6 stage special application pumps for customers in oval track, road racing, and drag racing. Examples include restricted volume dry sump oil pumps for qualifying and restrictor plate engines. Numerous mounting bracket options also allow you to interchange Barnes oil pumps on various small block or big block engine configurations.

The Barnes Oil Scavenge Manifold is a unique design for Quick-Disconnect and installation. The special discharge fittings feature an o-ring seal and a receiver groove to accept a quick release clip. Rather than tightening individual nuts for each scavenge stage, you simply push the Barnes Manifold onto the fittings and install the quick release clips! The o-ring and clip design provides a reliable seal.

BARNES
DRY SUMP OIL SYSTEMS



BS16000
Forward Mount Oil Scavenge Manifold (shown Mounted on BS9017-5B1)

CUSTOM MACHINING AVAILABLE

Custom Oil Scavenge Manifolds are available. Call your CV Sales Rep for more information.



BS8932
Block-Mount Oil Filter By-Pass for SBC



CVD44200
Oil Pump Priming Fitting

OIL SCAVENGE MANIFOLDS

PART #	DESCRIPTION
BS16000	SBC BS9017-5B Oil Scavenge Manifold
BS16000-20	SBC Manifold w/ -20 An Fitting
BS16000-620	Manifold 6 Stg -20 Out SBC for Number 1 Chevy
BS16000-RH	Manifold #1 R-Hand Chevy
BS16001	BS9017-5B Forward Mt Oil Scavenge Manifold
BS16001-520	5 Stg Manifold -20 Out
BS16001-620	Manifold/6 Stg -20 Out SBC for Number 2 Chevy
BS1600-16-RPBUSCH	Manifold -16 Out Busch Legal
BS16004	SBC 4 Stage Manifold
BS16006	Oil Scavenge Manifold
BS16010	for 9017-5f Oil Scavenge Manifold
BS16011	for 9017-5f Forward Mt Scav Manifold
BS16012-Q	SBC For 9018, 9019, 9020 Qual. (Pumps) Scavenge Manifold
BS16012-Q20	SBC For 9018, 9019, 9020 Qual. (Pumps) Scavenge Manifold w/ -20 An Fittings
BS16014-Q	SBF Scavenge Manifold



BS8935-10
In-Line Scavenge Filter (#10AN)



BS9011

OIL FILTER ADAPTER

PART #	DESCRIPTION
BS8909	Oil Filter Adapter
BS8932	Remote Filter Adapter
BS9011	90° Filter Adapter (Oil Cool)
BS9012	90° Filter Adapter (Oil In)



BS9012

OIL FILTER BLOCK OFF

PART #	DESCRIPTION
BS8910	Filter Block Off



BS8910
Oil Filter Block -off

OIL PUMP FITTING SPECIFICATIONS

PRESSURE SECTION BODY

WIDTH	FITTING IN	FITTING OUT
1.200"	#12AN	#10 or #12AN
1.000"	#12AN	#10 or #12AN
.800"*	#12AN	#10 or #12AN
.600"*	#12AN	#10 or #12AN
.400"*	#12AN	#10 or #12AN

SCAVENGE SECTION BODY

WIDTH	FITTING IN	FITTING OUT
1.200"	#12AN	#12AN
1.375"	#12AN	#12 or #16AN
1.700"	#12AN	#12 or #16AN

".400" - .800" pressure sections refer to internal gear widths: the pressure section body width remains 1.200" or 1.000".

The Oil Pump Fittings, from Barnes Systems, are specifically designed for the oil pump environment. They feature a radiused inlet to maximize flow, o-rings for a positive seal under pressure or vacuum, and a short thread design for easy installation.

OIL FILTER MOUNT

PART #	DESCRIPTION
BS8929	Universal Filter Mount (Std.ch)
BS8930	Filter Mount Sprint Car
BS8934	Universal Filter Mount (Hp6 Fr)



BS8934
Remote Oil Filter Mount

OIL SCAVENGE REPLACEMENT PARTS

PART #	DESCRIPTION
BS16020	Manifold Clips
BS16025	Replacement O-Ring for Manifold Fittings
BS16026	Replacment -12 AN Manifold Fittings

REPLACEMENT PARTS

ALLEN NUT

PART #	DESCRIPTION
BS10310	Bearing Cap

BEARING CAP

PART #	DESCRIPTION
BS10310	Bearing Cap
BS10310-FH	Bearing Cap Flat Head
BS10311	Bearing Cap/Rear w/O-Rings

BOLTS

PART #	DESCRIPTION
BS10391	Priming Bolt
BS10393	1/4" x 28 Bolt w/5/8" Head

BEARINGS

PART #	DESCRIPTION
BS10008	R-8 Bearing
BS10010	R-10 Bearing

BEARING, END CAP SEAL

PART #	DESCRIPTION
BS10580	Bearing End Cap Bearing & Seal



FITTINGS

PART #	DESCRIPTION
BS8-10FITTING	#8 Port to #10AN Male
BS8-12FITTING	#8 Port to #12AN Male
BS10-8FITTING	#10 Port to #8AN Male
BS10-10FITTING	#10 Port to #10AN Male
BS10-12FITTING	#10 Port to #12AN Male
BS10-16FITTING	#10 Port to #16AN Male
BS12-10FITTING	#12 Port to #10AN Male
BS12-12FITTING	#12 Port to #12AN Male
BS12-16FITTING	#12 Port to #16AN Male
BS12-8FITTING	#12 Port to #8 Male
BS-12BO	Fitting/-12/Bolt On
BS12QDA	#12 Alum Manifold
BS16-16FITTING	#16 Port to #16AN Male
BS-16BO	Fitting/-16/Bolt On

BARNES
DRY SUMP OIL SYSTEMS


BS12250


BS12320


BS12200


BS12360

REPLACEMENT PARTS (continued)

BRACKETS

PART #	DESCRIPTION
BS11400-A	.100" Mounting Bracket Alum for EE Ford
BS11410	.200" Support Bracket Steel for EE Ford
BS11420	.380" Mounting Bracket Alum for EE Ford
BS11500	Bracket .100" Cover Alum. Dodge
BS11510	Bracket .200" Support Alum. Dodge
BS11520	.380" Mounting Bracket Alum. Dodge
BS11521	.380" Rotor Pump Bracket for Dodge
BS12200	.200 SBC Support Steel Bracket
BS12201	.200" Bracket Support Aluminum
BS12310	.380" Mt Bracket SBC
BS12310-RP	.380" Rotor Bracket Chevy
BS12320	.100" Mt Bracket SBC
BS12351	4 or 5 Stage
BS12352	4 Stage
BS12353	5 Stage
BS12360	.380" Mt Bracket Ford
BS12360-LEFT	Left Hand Bracket Bearing & O-Ring BBC 4 Stage
BS12365-RP	BBC Mounting Bracket for Rotor Pump
BS12366-RP	SBC Mounting Bracket for Rotor Pump
BS12370	.100" Mt Bracket

BYPASS SECTION

PART #	DESCRIPTION
BS11591	Bypass Section
BS11591-SHORT	Bypass Section

SEPARATOR PLATE

PART #	DESCRIPTION
BS12000	.200" Crossport Separator Plate
BS12100	.200" Separator Plate No Cross Port
BS12100RP	Separator Plate/.200" for Rotor Pump

BYPASS PLUG

PART #	DESCRIPTION
BS10510	Bypass Plug
BS10511	Socket HD Bypass Short Plug

BYPASS SECTION

PART #	DESCRIPTION
BS10590	Bypass Section Includes Bearings
BS10591-LR	Left Rear Bypass NASCAR

BYPASS SPRING

PART #	DESCRIPTION
BS10500	Bypass Spring Med Pressure Orange Color Outer
BS10501	Bypass Spring Low Pressure White Color Outer
BS10502	Bypass Spring High Pressure Yellow Color Outer

BYPASS VALVE

PART #	DESCRIPTION
BS10520	Bypass Valve

COVER PLATE

PART #	DESCRIPTION
BS10592-LR	.100" Cover Plate Left Front By-Pass
BS10-8FITTING	#10 Port To #8 AN Male
BS10QDA	#10 Alum Manifold Fitting

DOWEL PIN

PART #	DESCRIPTION
BS10331	Dowel Pin 1/8" x 3/8"

DRIVESHAFT

PART #	DESCRIPTION
BS018-10.080	Driveshaft / 4 Stage
BS14001	Drive Shaft / 9017-5 w/1 Stage In Front of Bracket
BS14002	Drive Shaft / 9017-5 w/2 Stage In Front of Bracket

BRACKET

PART #	DESCRIPTION
BS14100-6RP	Drive Shaft Rotor 6 Stage

FUEL PUMP SPUD

PART #	DESCRIPTION
BS057-R	Rt Hand Thread



DRIVE GEARS

PART #	DESCRIPTION
BS7009	.400" Drive Gear
BS11050	.800" Drive Gear
BS11070	.600" Drive Gear
BS11100	1.000" Drive Gear
BS11220	1.200" Drive Gear
BS11220-1173	1.200" Drive Gear
BS11220-RP	1.200" Rotor Drive Gear
BS11320	1.375" Drive Gear
BS11380-RP	1.700" Rotor Drive Gear



IDLER GEARS

PART #	DESCRIPTION
BS7008	.400" Idler Gear
BS11060	.800" Idler Gear
BS11080	.600" Idler Gear
BS11110	1.000" Bronze Idler Gear
BS11225	1.200" Bronze Idler Gear
BS11225-1173	1.200" Bronze Idler Gear
BS11225-RP	Rotor Idler Gear .200"
BS11325	1.375" Bronze Idler Gear
BS11325-RP	1.375" Bronze Idler Gear
BS11376	1.375" Gear Body (Old Style)
BS11379	1.700" Idler Gear
BS11379-RP	1.700" Idler Gear Rotor
BS11320-RP	1.375" Rotor Pump Drive

IDLER SHAFT

PART #	DESCRIPTION
BS14100	Idler Shaft

NUTS

PART #	DESCRIPTION
BS10333	Nuts 12pt for Studs


BS11000


CVS-7001

TECH TIP

Before choosing a standard or custom Barnes oil pump, you need to ask the following questions:

- Weight of oil?
- Operating temperature range?
- Oil consumption at idle?
- Oil consumption at operating range?
- Desired vacuum level?

Installing a proper dry sump oiling system requires more than just the proper pump. CV Products offers a comprehensive choice of components that are required and/or recommended: In-line Oil Filters, Drive Pulley, Drive Belt, Remote Oil Filter Mt. and Std Oil Filters.

BARNES
DRY SUMP OIL SYSTEMS

REPLACEMENT PARTS (continued)

HOUSING

PART #	DESCRIPTION
BS11000	1" Alum Gear Housing
BS11200	1.200" Iron Gear Housing
BS11201	1.200" Alum Gear Housing*(Replaces BS11200-a)*
BS11201-RP	Gear Housing Rotor 1.200"
BS11375	1.375" Gear Housing Aluminum
BS11375-RP	Rotor Housing Gear 1.375" Alum.
BS11378-RP	1.700" Housing Pro Stock



O-RING SEALS

PART #	DESCRIPTION
BS7004	O-Ring Seal Kit for 7000
BS15000	5 Stage O-Ring Seal Kits
BS15000-RP	1.700" O-Ring Seal Kit
BS15006	Seal Kit O-Ring
BS15006-RP	Seal Kit O-Ring/Rotor Pump

PLATES

PART #	DESCRIPTION
BS12221	.300" Wide Floater Plate
BS12250	.200" BBF Steel Support Bracket
BS12300	.100" Bearing Cover Plate
BS12301	.100" Cover Plate Bearing No Crossport
BS12303	.380" Bearing Plate No Crossport
BS12304-RP	.380" Seperator Rotor Plate w/Crossport
BS12350	.480" SBC Mount Plate Bearing Included
BS12351	.380" Bert Mount Plate Has Bearings
BS12352	.480" Bert Mount Plate No Bearings

REDUCER PLATE

PART #	DESCRIPTION
BS12210	.200" Reducer Plate
BS12211	.300" Reducer Plate
BS12213	.400" Reducer Plate
BS12213-RP	Reducer Plate for 9025-RP Pump

PLUGS

PART #	DESCRIPTION
BS8 Plug	#8 Plug
BS10 Plug	#10 Port Plug
BS12 Plug	#12 Port Plug

PRESS STAGE

PART #	DESCRIPTION
BS11215	1-3/8" Press Stage Cast Iron

SCAVENGE SCREENS

PART #	DESCRIPTION
BS8935-10	In-line Scavenge Screens
BS8935-12	In-line Scavenge Screens

ADJUSTMENT SCREWS

PART #	DESCRIPTION
BS10575	Allen Head Adj. Screw & Nut
BS10577	Adjuster Flat Head
BS10578	Socket HD Adj Screw & 9/16" Nut Screws
BS055	1/4" 28 Set Screw
BS10340	Screw/4-40 Need 2 for A Pump
BS10340-fh	Flat Head 4-40 Screws
BS10345	Screw 10/32" x 3/8" Low Head
BS10390	1/4"-28 Screw

SEAL KIT

PART #	DESCRIPTION
BS042	Oil Seal
BS044	Seal Kit for Old Style 6 Bolt 5 Stage Belt Drive

SHAFT

PART #	DESCRIPTION
BS7010	Shaft/idler for 7000 Pump
BS7012	Rear End Pump Housing .400" Red

SHIM KIT

PART #	DESCRIPTION
BS7006	Shim Kit for 7000 Series

SLEEVE SHAFT

PART #	DESCRIPTION
BS10392	Sleeve/Shaft

SNAP RING

PART #	DESCRIPTION
BS10350	Snap Ring

SQUARE KEY

PART #	DESCRIPTION
BS10360	3/16" Square Key

SPOOL

PART #	DESCRIPTION
BS10370	1.375" Spool



STUDS

PART #	DESCRIPTION
BS058-9.5	Stud for Pump 9.500"
BS14500	Stainless Studs (4)

WASHERS

PART #	DESCRIPTION
BS10320	1/4" Washers
BS10380	1/4" Washer
BS7002	3/8" Step Washer

WOODRUFF KEY

PART #	DESCRIPTION
BS10300	Woodruff Key

REAR END PUMPS

PART #	DESCRIPTION
BS7000	Rear End Pump Bottom Inlet Top Outlet
BS7001	Rear End Pump - Bracket Fits 7000 & 7005 Pumps
BS7005	Rear End Pump - Rear Inlet & Outlet
BS7003	2 Stage Rear End Pump Bottom Inlet Top Outlet
CVD40100	Rear End Pump Pulley 6.450 OD 5/8" Shaft 3/16" Keyway

MISCELLANEOUS

PART #	DESCRIPTION
BS16-PLUG	#16 Button Head Plug
BS11375	1.375" Aluminum Gear Housing
BS8910PB	Block Off w/3/8" Bolts
BS9017-4B1	4 Stage Pump Cast Iron 1.2 P/S
BS9017-4BMMR	4 Stage Pump Mercury Marine

BORN FROM JOE GIBBS RACING

DRIVEN

DRIVEN TO WIN RACING OIL®

Available in: 15W-50, 5W-20, 5W-30 and 10W-40
Purchase as single quarts, case of 12qts. or 2.5 Gallon Jug.



BREAK IN OIL

THE FOUNDATION FOR MAXIMUM DURABILITY AND PERFORMANCE

Driven Engine Break-In Oils are used to dyno and break-in all of the engines at Joe Gibbs Racing. This petroleum based oil has been formulated to supply the highest levels of zinc and phosphorus to the cam and lifters. No additional zinc (ZDDP) additives are required. Driven Engine Break-In Oils provide the maximum protection available during the critical engine break-in period. This oil is ideal for testing and power pulls on the dyno, one night of racing or up to 400 miles on the street!

FEATURES

- ZDDP-Fortified Cam Protection
- Chemically Seals Piston Rings
- Protects Bearings and Journals

DESCRIPTION	1 QT. BOTTLE	1 CASE (12/QT. BOTTLES)	6QT./2.5GAL. JUG
BR SAE 15W-50	JGR00106	JGR00107	JGR00114
BR20 SAE 5W-20	JGR04346	JGR04347	-
BR30 SAE 5W-30	JGR01806	JGR01807	-
BR40 SAE 10W-40	JGR03706	JGR03707	-

SYNTHETIC RACING OIL

COMPETITION PROVEN TO DELIVER MAXIMUM PERFORMANCE

Driven Synthetic Racing Oils are specially formulated for the specific needs of racing engines. The engineers and engine builders at Joe Gibbs Racing have put in countless hours perfecting this oil to maximize horsepower and protect vital parts. This line of synthetic racing oil offers the best protection available with improved cold start protection.



FEATURES

- Used by Joe Gibbs Racing for qualifying in their restrictor plate engines.
- It utilizes ultra-low viscosity synthetic base oils for maximum horsepower during qualifying conditions.
- Uses the same anti-wear and friction reducing additives that XP1 uses to reduce friction and fight valve-train wear.
- Compatible with methanol and high-octane race fuels.

DESCRIPTION	1 QT. BOTTLE	1 CASE (12/QT. BOTTLES)	6QT./2.5GAL. JUG
XP0 Synthetic SAE 0W-5	JGR00406	JGR00407	JGR00414
XP1 Synthetic SAE 5W-20	JGR00006	JGR00007	JGR00014
XP2 Synthetic SAE 0W-20	JGR00206	JGR00207	-
XP3 Synthetic SAE 10W-30	JGR00306	JGR00307	JGR00314
XP6 Synthetic SAE 15W-50	JGR01006	JGR01007	-
XP9 Synthetic SAE 10W-40	JGR03206	JGR03207	-

Purchase as single quarts, case of 12qts. or 2.5 Gallon Jug

XP0 SYNTHETIC SAE 0W-5

- Used by Joe Gibbs Racing for qualifying in their restrictor plate engines.
- It utilizes ultra-low viscosity synthetic base oils for maximum horsepower during qualifying conditions.
- Uses the same anti-wear and friction reducing additives that XP1 uses to reduce friction and fight valve-train wear.
- Compatible with methanol and high-octane race fuels.

XP1 SYNTHETIC SAE 5W-20

- Used by Joe Gibbs Racing in all their unrestricted engines.
- Designed to handle 500 miles of competition, over 9500 RPM and temperatures above 250 degrees.
- Reduces friction and fights valve-train wear, especially in flat-tappet engines by utilizing multiple synthetic base oils, and anti-wear and friction reducing additives.
- Compatible with methanol and high octane race fuels.
- Can be blended with XP0, XP2, XP3 or XP6. Consult the Driven blending guide for blending specifications.

XP2 SYNTHETIC SAE 0W-20

- Used by Joe Gibbs Racing in all their Nationwide Series roller camshaft engines and restrictor plate flat tappet engines.
- Utilizes low viscosity synthetic base oils for increased horsepower without decreased durability.
- Uses the same anti-wear and friction reducing additives that XP1 uses to reduce friction and fight valve-train wear.
- Compatible with methanol and high octane race fuels.
- Can be blended with XP0, XP1, XP3 or XP6. Consult the Driven blending guide for blending specifications.

XP3 SYNTHETIC SAE 10W-30

- A higher viscosity version of XP1, it offers outstanding high-temperature, high-shear protection.
- Designed for aluminum blocks and looser clearances, it utilizes multiple synthetic base oils and anti-wear and friction reducing additives to reduce friction and fight valve-train wear.
- Compatible with methanol and high octane race fuels.
- Can be blended with XP0, XP1, XP2 or XP6. Consult the Driven blending guide for blending specifications.

XP6 SYNTHETIC SAE 15W-50

- A full synthetic, 15W-50 version of our race proven XP1
- Provides excellent bearing oil film thickness and high temperature protection.
- Designed for aluminum blocks and looser clearances
- Recommended for methanol fuel and high temperature applications (Oil temperatures above 240°F)
- Can be blended with XP1, XP2, XP3 or XP0. Consult the Driven blending guide for blending specifications.
- For use in high compression engines

XP9 SYNTHETIC SAE 10W-40

- Utilizes select synthetic base oils for increased durability at high engine temperatures.
- Provides increased high shear protection for wet sump and high compression applications.
- Formulated with proprietary anti-wear and friction reducing additives to fight valve-train wear and increase horsepower.
- Ideal for high output steel block engines, compatible with methanol and high octane race fuels.

SEMI-SYNTHETIC RACING OIL

Driven Racing Oils are specially formulated for the specific needs to racing engines. The engineers and engine builders at Joe Gibbs Racing have put in countless hours perfecting this oil to maximize horsepower and protect vital parts. This line of semi-synthetic oils offer improved high temperature shear and oxidation stability compared to mineral oils without the higher cost of a full synthetic.

A semi-synthetic based on our original formula race oil, XP5 offers improved high temperature shear and oxidation stability compared to mineral oil without the higher cost of a full synthetic.



FEATURES

- Excellent bearing oil film thickness
- High Zinc levels
- For use in high compression engines

APPLICATIONS

- Dirt Late Model engines
- Engines designed for SAE 50 weight oils
- Engines operating with oil temperatures between 220F and 260F

DESCRIPTION	1 QT. BOTTLE	1 CASE (12/1QT. BOTTLES)	1/2 GAL. JUG
XP5 SAE 20W-50	JGR00906	JGR00907	JGR00914

PETROLEUM RACING OIL

FEATURES

- A high zinc, petroleum formula racing oil offering low cost protection for racers who want to use non-synthetic oil.
- Excellent protection for dirt and nitrous racers who need to change their oil frequently.

APPLICATIONS

- Big block engines, flat tappet camshaft engines, Nitrous engines and Alcohol fueled drag engines.

DESCRIPTION	1 QT. BOTTLE
XP4 SAE 15W-50	JGR00507



HIGH PERFORMANCE MOTOR OILS

Driven Racing Oils are specially formulated for the specific needs to racing engines. The engineers and engine builders at Joe Gibbs Racing have put in countless hours perfecting this oil to maximize horsepower and protect vital parts. This line of semi-synthetic oils offer improved high temperature shear and oxidation stability compared to mineral oils without the higher cost of a full synthetic.

DESCRIPTION	1 QT. BOTTLE
HR-1 Conventional 15W-50	JGR02107
HR-2 Conventional 10W-30	JGR02007
HR-3 Synthetic 15W-50	JGR01607
HR-4 Synthetic 10W-30	JGR01507
LS30 Synthetic 5W-50	JGR02907



HR-1 CONVENTIONAL 15W-50

- Perfect for big block muscle cars and blown street rods.
- Perfect for engines with original seals.
- Good for loose bearing clearances.

HR-2 CONVENTIONAL 10W-30

- Great for small block street cruisers and "crate" motors.
- 10W Multi-grade formula provides excellent start-up protection.

HR-3 SYNTHETIC 15W-50

- The perfect choice for modified "old school" muscle cars.
- Excellent protection for big blocks and looser clearance engines.
- Ideal for long stroke and/or high compression engines.

HR-4 SYNTHETIC 10W-30

- The ultimate in street/strip protection
- Excellent start-up protection and the high temperature stability of a synthetic.
- Great choice for street/strip bracket racers.



LS30 SYNTHETIC 5W-50

- Designed for high performance LS series engines.
- Utilizes advanced synthetic base oils to provide high temperature and high shear protection.
- Ideal for LS based "crate" engines and supercharged LS performance engines.

BORN FROM JOE GIBBS RACING

DRIVEN

DRIVEN TO WIN RACING OIL

GEAR OIL

DESCRIPTION	1 QT. BOTTLE	5 GALLON PAIL
Synthetic Gear Oil 75W-110	JGR00631	JGR00617
Super Speedway Gear Oil 70W-85	JGR00831	JGR00817
Qualifying Gear Oil	JGR01131	-

SYNTHETIC GEAR OIL 75W-110

- Reduces operating temperatures by up to 15°F compared to other brand gear oils.

SUPER SPEEDWAY GEAR OIL 75W-85

- Provides race proven durability and dyno proven power gains form reduced friction and parasitic drag.
- It can be used in quick change style rear ends and drag race applications.

QUALIFYING GEAR OILS

- An ultra-lightweight gear oil developed specifically for stock car qualifying
- Provides race proven durability in open wheel competition.



SPECIALITY SYNTHETIC RACING OILS

FEATURES

- Formulated with select synthetic base oils for increased horsepower and durability at high temperatures.
- Utilizes proprietary anti-wear and friction reducing additives to fight valve train wear and increase horsepower.
- Compatible with methanol and high octane race fuels.

DESCRIPTION	1 QT. BOTTLE
KRT-4 Stroke Karting Oil 0W-20	JGR03406

RACE WAX

Developed for use by Joe Gibbs Racing, Driven Racing Oil Race Wax is a performance spray wax and cleaner that delivers a smooth, glossy finish and effectively sheds dirt, tire rubber and track debris. This race-proven product is perfect for cleaning and protecting painted surfaces, full decal wraps and fiberglass panels. Providing unmatched protection for decal graphic wraps, this wax enables a new level of design creativity in vehicle styling. Designed for quick and easy application, this wax will not damage the decal, paint or windows, and clean up is simple. Driven Racing Oil Race Wax is available in a 24 oz. spray bottle and creates a perfect, eye-catching shine.

FEATURES

- Delivers a smooth, glossy finish & effectively sheds dirt, tire rubber and track debris
- Race-proven product is perfect for cleaning and protecting painted surfaces, full decal wraps & fiberglass panels
- Unmatched protection for decal graphic wraps; this wax enables a new level of design creativity in vehicle styling
- Quick and easy application, this wax will not damage decals, paint or windows, and clean up is simple



SPEED CLEAN FOAMING CLEANER & DEGREASER

FEATURES

- Safely removes tire rubber, grease and oil from your car
- Will not harm paint or decals
- Perfect for removing anti-rust coatings on engine parts prior to assembly
- Just spray on and wipe off
- Works great for cleaning up shop equipment and tools



CLEANERS

PART #	DESCRIPTION
JGR50060	Race Wax, 24oz. Bottle
JGR50010	Speed Clean Foaming Cleaner & Degreaser, 18oz. Can

BORN FROM JOE GIBBS RACING

DRIVEN

DRIVEN TO WIN RACING OIL

GREASE & LUBRICANTS

PART #	DESCRIPTION
JGR00728	Engine Assembly Grease 1lb. Tub
JGR70070	Spline Grease

ENGINE ASSEMBLY GREASE

FEATURES

- 1-pound tub of engine assembly grease
- Unique extreme pressure lube dissolves in oil without clogging oil passageways or plugging filters
- Apply to cams and lifters for break-in protection
- Can also be used on rocker shafts, pushrod tips wrist pins and distributor gears
- When combined with BR Break-In Oil, it provides proven protection during break-in



SPLINE GREASE

Joe Gibbs Driven spline grease is designed to provide top-quality protection for cambered axle drive flanges, Sprint Car drivelines, and more. The spline grease utilizes a high-viscosity synthetic base, proprietary anti-wear additives, and a Polyurea thickener that is specifically developed to extend durability. It's perfect for use in racing applications with sliding spline teeth operating at high temperatures and rpm. Want to go for a win? Use Joe Gibbs Driven Racing Oil products!





ACCESS TO COMPLETE PRODUCT LINE AVAILABLE



Fragola
Performance Systems

PUSH LOCKS

PART #	DESCRIPTION
FRA200104	AN4 Push Lock End Straight
FRA200106-BL	AN6 Push Lock End Straight Black
FRA200108	AN8 Push Lock End Straight
FRA200108-BL	AN8 Push Lock End Straight Black
FRA200110-BL	AN10 Push Lock End Straight Black
FRA200112-BL	AN12 Push Lock End Straight Black
FRA200116	AN16 Push Lock End Straight Plain
FRA204504-BL	AN4 Push Lock End 45 Black
FRA204508-BL	AN8 Push Lock End 45 Black
FRA204510-BL	AN10 Push Lock End 45 Black
FRA206006-BL	AN6 Push Lock End 60 Black
FRA209004	AN4 Push Lock End 90
FRA209006-BL	AN6 Push Lock End 90 Black
FRA209008	AN8 Push Lock End 90
FRA209008-BL	AN8 Push Lock End 90 Black
FRA209010-BL	AN10 Push Lock End 90 Black
FRA209016	AN16 Push Lock End 90 Clear
FRA212010-BL	AN10 Push Lock End 120 Black



Fragola Performance Systems Series 3000 Hose Ends feature the "cutter" method of hose attachments. The socket draws the hose over the nipple and into the cutter. The seal is formed by the cutter imbedding itself into the end of the hose. If no color is specified, the standard part number is for the regular red and blue. Use these hose ends with our Series 3000 Stainless Race Hose only.

POWER FLOW HOSE ENDS

PART #	DESCRIPTION
FRA100106	AN6 Straight Power Flow Hose End
FRA100108	AN8 Straight Power Flow Hose End
FRA100108-BL	AN8 Straight Power Flow Hose End
FRA100110-BL	AN10 Straight Power Flow Hose End
FRA103008-BL	AN8 x 30 Power Flow Hose End
FRA103016-BL	AN16 x 30 Power Flow Hose End
FRA104506	AN6 x 45 Power Flow Hose End
FRA112008-BL	AN8 x 120 Power Flow Hose End



The Series 2000 Pro Flow Hose Ends differ from the Series 3000 Hose Ends in the fact that they feature the "single nipple" method of hose attachment. With the "single nipple" style, the socket draws the hose over a long tapered single nipple. The sealing feature is the crush of the hose between the inside of the socket and the outside of the nipple. With this style of hose end, reusing it is a breeze.

PRO-FLOW HOSE ENDS

PART #	DESCRIPTION
FRA220104-BL	AN4 Straight Pro-Flow Hose End
FRA220106	AN6 Straight Pro-Flow Hose End
FRA220106-BL	AN6 Straight Pro-Flow Hose End
FRA220108-BL	AN8 Straight Pro-Flow Hose End
FRA220110-BL	AN10 Straight Pro-Flow Hose End
FRA220112-BL	AN12 Straight Pro-Flow Hose End
FRA220116	AN16 Straight Pro-Flow Hose End
FRA223006-BL	AN6 x 30 Pro-Flow Hose End
FRA223012-BL	AN12 x 30 Pro-Flow Hose End
FRA224506-BL	AN6 x 45 Pro-Flow Hose End
FRA224508-BL	AN8 x 45 Pro-Flow Hose End
FRA224510-BL	AN10 x 45 Pro-Flow Hose End
FRA224512-BL	AN12 x 45 Pro-Flow Hose End
FRA224516-BL	AN16 x 45 Pro-Flow Hose End
FRA226008-BL	AN8 x 60 Pro-Flow Hose End
FRA226010-BL	AN10 x 60 Pro-Flow Hose End
FRA226012-BL	AN12 x 60 Pro-Flow Hose End
FRA229004-BL	AN4 x 90 Pro-Flow Hose End
FRA229006-BL	AN6 x 90 Pro-Flow Hose End
FRA229008	AN8 x 90 Pro-Flow Hose End
FRA229008-BL	AN8 x 90 Pro-Flow Hose End
FRA229010-BL	AN10 x 90 Pro-Flow Hose End
FRA229012-BL	AN12 x 90 Pro-Flow Hose End
FRA229016-BL	AN16 x 90 Pro-Flow Hose End
FRA231206-BL	AN6 x 120 Pro-Flow Hose End
FRA231208-BL	AN8 x 120 Pro-Flow Hose End
FRA231210-BL	AN10 x 120 Pro-Flow Hose End

Fragola's Sport-Crimp Hose Ends share the same high quality design components as our 3000 Series Race Hose Ends. They feature a crimp collar, that threads onto the Hose End body. This assures the user of a perfect crimp connection every time. The Hose Ends are also adjustable in the field, due to Fragola's unique "double swivel" design.

SPORT-CRIMP

PART #	DESCRIPTION
FRA3100106	Sport Crimp H/E, 6 AN, Straight
FRA3100108	Sport Crimp H/E, 8 AN, Straight
FRA3100110	Sport Crimp H/E, 10 AN, Straight
FRA3100112	Sport Crimp H/E, 12 AN, Straight
FRA3100116	Sport Crimp H/E, 16 AN, Straight
FRA3104506	Sport Crimp H/E, 6 AN, 45deg.
FRA3104508	Sport Crimp H/E, 8 AN, 45deg.
FRA3104510	Sport Crimp H/E, 10 AN, 45deg.
FRA3104512	Sport Crimp H/E, 12 AN, 45deg.
FRA3104516	Sport Crimp H/E, 16 AN, 45deg.

PART #	DESCRIPTION
FRA3109006	Sport Crimp H/E, 6 AN, 90deg.
FRA3109008	Sport Crimp H/E, 8 AN, 90deg.
FRA3109010	Sport Crimp H/E, 10 AN, 90deg.
FRA3109012	Sport Crimp H/E, 12 AN, 90deg.
FRA3109016	Sport Crimp H/E, 16 AN, 90deg.
FRA3112006	Sport Crimp H/E, 6 AN, 120deg.
FRA3112008	Sport Crimp H/E, 8 AN, 120deg.
FRA3112012	Sport Crimp H/E, 12 AN, 120deg.
FRA3118012	Sport Crimp H/E, 12 AN, 180deg.



Fragola
Performance Systems



UNION

PART #	DESCRIPTION
FRA481503	AN3 Union
FRA481503-BL	AN3 Union Black
FRA481504	AN4 Union
FRA481506-BL	AN6 Union Black
FRA481508-BL	AN8 Union Black
FRA481510	AN10 Union
FRA481510-BL	AN10 Union Black
FRA481512	AN12 Union
FRA481516-BL	AN16 Union Black
FRA482103-BL	-3x90 Union Fitting Black
FRA482108-BL	AN8 90deg. Union Black



STRAIGHT ADAPTER

PART #	DESCRIPTION
FRA481603-BL	AN3 x 1/8" MPT Straight Adapter
FRA481604	AN4 x 1/8" MPT Straight Adapter
FRA481604-BL	AN4 x 1/8" MPT Straight Adapter
FRA481605	AN4 x 1/4" MPT Straight Adapter
FRA481605-BL	AN4 x 1/4" MPT Straight Adapter
FRA481606	AN6 x 1/4" MPT Straight Adapter
FRA481606-BL	AN6 x 1/4" MPT Straight Adapter
FRA481607-BL	AN8 x 1/4" MPT Straight Adapter
FRA481608	AN8 x 3/8" MPTStraight Adapter
FRA481608-BL	AN8 x 3/8" MPT Straight Adapter
FRA481609	AN10 x 3/4" MPT Straight Adapter
FRA481609-BL	AN10 x 3/4" MPT Straight Adapter
FRA481610	AN10 x 1/2" MPT Straight Adapter
FRA481610-BL	AN10 x 1/2" MPT Straight Adapter
FRA481611	AN10 x 3/8" MPT Straight Adapter
FRA481611-BL	AN10 x 3/8" MPT Straight Adapter
FRA481612	AN12 x 3/4" MPT Straight Adapter
FRA481612-BL	AN12 x 3/4" MPT Straight Adapter
FRA481613	AN12 x 1/2" MPT Straight Adapter
FRA481613-BL	AN12 x 1/2" MPT Straight Adapter
FRA481616-BL	-16 x 1" Black Str Fitting
FRA481644-BL	AN4 x 3/8" MPT Straight Adapter
FRA481662	AN6 x 1/8" MPT Straight Adapter
FRA481662-BL	AN6 x 1/8" MPT Straight Adapter
FRA481666	AN6 x 3/8" MPT Straight Adapter
FRA481666-BL	AN6 x 3/8" MPT Straight Adapter
FRA481668-BL	AN6 x 1/2" MPT Straight Adapter
FRA481688	AN8 x 1/2" MPT Straight Adapter
FRA481688-BL	AN8 x 1/2" MPT Straight Adapter
FRA581603	AN3 x 1/8" MPT Straight Adapter
FRA581604	AN4 x 1/8" MPT Straight Adapter
FRA581607	AN8 x 1/4" MPT Straight Adapter
FRA581662	AN6 x 1/8" MPT Straight Adapter
FRA581690	AN4 x 1/8" MPT, Oil Pressure



HOSE ASSEMBLY

PART #	DESCRIPTION
FRA310012	AN3 Hose Assembly STR x STR 12
FRA310018	AN3 Hose Assembly STR x STR 18
FRA310020	AN3 Hose Assembly STR x STR 20
FRA320012B	AN3 Hose Assembly STR x 90 12
FRA320014	AN3 Hose Assembly STR x 90 14
FRA320016B	AN3 Hose Assembly STR x 90 16
FRA320018B	AN3 Hose Assembly STR x 90 18
FRA320020B	AN3 Hose AssemblySTR x 90 20
FRA320022B	AN3 Hose Assembly STR x 90 22
FRA320024B	AN3 Hose Assembly STR x 90 24



45° ADAPTERS

PART #	DESCRIPTION
FRA482308	AN8 x 3/8" MPT 45 Adapter
FRA482308-BL	AN8 x 3/8" MPT 45 Adapter Black
FRA482313-BL	AN12 x 1/2" MPT 45 Adapter Black
FRA482344-BL	AN4 x 1/4" MPT 45 Adapter Black
FRA482366	AN6 x 3/8" MPT 45 Adapter
FRA482366-BL	AN6 x 3/8" MPT 45 Adapter Black



90° ADAPTERS

PART #	DESCRIPTION
FRA482203	AN3 x 1/8" MPT 90 Adapter
FRA482203-BL	AN3 x 1/8" MPT 90 Adapter Black
FRA482204	AN4 x 1/8" MPT 90 Adapter
FRA482204-BL	AN4 x 1/8" MPT 90 Adapter Black
FRA482206	AN6 x 1/4" MPT 90 Adapter
FRA482206-BL	AN6 x 1/4" MPT 90 Adapter - Black
FRA482208-BL	AN8 x 3/8" MPT 90 Adapter Black
FRA482210-BL	AN10 x 1/2" MPT 90 Adapter Black
FRA482244-BL	AN4 x 1/4" MPT 90 Adapter Black
FRA482262-BL	AN6 x 1/8" MPT 90 Adapter Black
FRA482266-BL	AN6 x 3/8" MPT 90 Adapter Black
FRA482268-BL	AN6 x 1/2" MPT 90 Adapter Black
FRA482288	AN8 x 1/2" MPT 90 Adapter
FRA482288-BL	AN8 x 1/2" MPT 90 Adapter Black



T ADAPTERS

PART #	DESCRIPTION
FRA482406	Tee Aluminum AN6 Adapter-Blue
FRA482408-BL	AN8 Tee Black
FRA482410-BL	AN10 Tee Black
FRA482503-BL	-3 Tee,1/8" MPT,On The Side Black
FRA482504	Aluminum Tee Pipe AN4 - Blue



BULKHEAD

PART #	DESCRIPTION
FRA480403	AN3 Bulkhead Tee - On The Run Bulkhead Nut
FRA483203	AN3 Straight Bulkhead - Blue
FRA483203-BL	AN3 Straight Bulkhead - Black
FRA483204-BL	AN4 Straight Bulkhead - Black
FRA483206-BL	AN6 Straight Bulkhead - Black
FRA483208	AN8 Straight Bulkhead - Blue
FRA483208-BL	AN8 Straight Bulkhead - Black
FRA483210	AN10 Straight Bulkhead - Blue
FRA483210-BL	AN10 Straight Bulkhead - Black
FRA483212	AN12 Straight Bulkhead - Blue
FRA483212-BL	AN12 Straight Bulkhead - Black
FRA483216	AN16 Straight Bulkhead - Blue
FRA483216-BL	AN16 Straight Bulkhead - Black
FRA483303	AN3 90deg. Bulkhead - Blue
FRA483303-BL	-3 x 90 Bulkhead - Black
FRA483306	90deg. Bulkhead AN6 - Blue
FRA483306-BL	-6 x 90 Bulkhead - Black
FRA483308	90deg. Bulkhead AN8 - Blue
FRA483403	AN3 Bulkhead Tee
FRA483403-BL	-3 Bulkhead Tee - Black
FRA483703-BL	-3 x 45 Bulkhead - Black
FRA492403	AN3 Bulkhead Nut - Blue
FRA492403-BL	AN3 Bulkhead Nut - Black
FRA492404-BL	AN4 Bulkhead Nut - Black
FRA492408	AN8 Bulkhead Nut - Blue
FRA492410	AN10 Bulkhead Nut - Blue
FRA492410-BL	AN10 Bulkhead Nut - Black
FRA492412	AN12 Bulkhead Nut - Blue
FRA492412-BL	AN12 Bulkhead Nut - Black
FRA492416	AN16 Bulkhead Nut - Blue
FRA592403	AN3 Bulkhead Nut - Steel 3/8-2



CARB FITTING

PART #	DESCRIPTION
FRA491973-BL	Carb Fttg -8 Female For Brasswell
FRA491974-BL	Carb Fttg -8 Female 3" 7/8"-20
FRA491976-BL	AN8 x 7/8"-20 Carb Adapter Long
FRA491989-BL	-6 x 3/8" F.1. Fitting LT-1 Black



PIPE PLUG

PART #	DESCRIPTION
FRA493201-BL	1/16" Pipe Plug
FRA493202-BL	1/8" MPT Pipe Plug - Internal
FRA493204	3/8" MPT Pipe Plug - Internal
FRA493205	1/2" MPT Pipe Plug - Internal
FRA493205-BL	1/2" MPT Pipe Plug - Internal
FRA493206-BL	3/4" MPT Pipe Plug - Internal
FRA493207	1" MPT Pipe Plug - Internal

Fragola
Performance Systems



REDUCER

PART #	DESCRIPTION
FRA491103-BL	Male Pipe Nipple 3/8"-3/8" Black
FRA491201-BL	1/8" x 1/4" Pipe Reducer Bushing Black
FRA491203-BL	1/8" x 3/8" Pipe Reducer Bushing Black
FRA491204-BL	3/8" x 1/2" Pipe Reducer Bushing Black
FRA491206	1/8" x 1/2" Pipe Reducer Bushing Black
FRA491206-BL	1/8" x 1/2" Pipe Reducer Bushing Black
FRA491501	1/8" Pipe 45deg. Male/Female
FRA491908-BL	AN8 x AN4 Reducer Black
FRA491923	AN12 x AN16 Male Reducer
FRA491926	AN16 x AN20 Male Reducer



ADAPTER

PART #	DESCRIPTION
FRA491952-BL	AN6 x 7/8"-20 Male Adapter-Dual
FRA491954	AN6 x 12mm x 1.25" Male Adapter
FRA491955-BL	AN6 x 1/2"-20 Male Adapter-5/16"
FRA491966	AN8 x 9/16"-24 Holley & Deamon



FLARE CAP

PART #	DESCRIPTION
FRA492903	Aluminum Flare Cap AN3 - Blue
FRA492904	Aluminum Flare Cap AN4 - Blue
FRA492904-BL	Aluminum Flare Cap AN4 - Black
FRA492906	Aluminum Flare Cap AN6 - Blue
FRA492906-BL	Aluminum Flare Cap AN6 - Black
FRA492908	Aluminum Flare Cap AN8 - Blue
FRA492908-BL	-8 Cap Black
FRA492910	Aluminum Flare Cap AN10 - Blue
FRA492910-BL	-10 Cap Black
FRA492912	Aluminum Flare Cap AN12 - Blue
FRA492912-BL	Aluminum Flare Cap AN12 - Black



GAUGE ADAPTER

PART #	DESCRIPTION
FRA495000-BL	Inline Gauge Adapter AN4 x AN
FRA495002-BL	3/8" NPT to AN6 Gauge Adapter
FRA495005	Inline Gauge Adapter AN6 Male
FRA495005-BL	Gauge Adapters
FRA495021	AN4 x 1/8" FPT Gauge Adapter-Straight

Fragola Performance Systems



RADIUS FITTINGS

PART #	DESCRIPTION
FRA495100	AN6 x 9/16"-18, 6 Radius Fitting
FRA495100-BL	-6 x 9/16"-18, 6 Radius Fitting
FRA495101	AN6 x 3/4"-16, 8 Radius Fitting
FRA495101-BL	-6 x 3/4"-16, 8 Radius Fitting
FRA495102-BL	AN8 x 9/16"-18, 6 Radius Fitting
FRA495103-BL	AN8 x 3/4"-16, 8 Radius Fitting
FRA495104-BL	AN8 x 7/8"-14, 10 Radius Fitting
FRA495110	AN4 x 9/16"-18, 6 Radius Fitting
FRA495113-BL	AN6 x 7/8"-14, 10 Radius Fitting
FRA495114	AN6 x 1-1/16"-12 ,12 Radius Fitting
FRA495115	AN8 x 1-1/16"-12, 12 Radius Fitting
FRA495120-BL	AN 1/16" - 12,12 Radius Fitting
FRA495125-BL	-4 x 7/16"-20, 4 Radius Fitting
FRA495641-BL	AN12 x 12 ORB Short
CVF-OR10AN10	Radius Fitting, Short ORB-10
CVF-OR10AN12	Radius Fitting, Short ORB-10
CVF-OR12AN10	Radius Fitting, Short ORB-12
CVF-OR12AN12	Radius Fitting, Short ORB-12
FRACV495105-BL	-10 x 3/4"-16, 8 Radius Fitting



CONNECTORS

PART #	DESCRIPTION
FRA496104	AN4 Female Connector
FRA496106	AN6 Female Connector
FRA496108-BL	-8 Female Connector Black
FRA496110	AN10 Female Connector
FRA496110-BL	AN10 Female Coupler
FRA496206-BL	-6 x 45 Female Coupler Black
FRA496210-BL	AN10 x 45 Female Coupler
FRA496310	AN10 x 90 Female Coupler



WELD BUNGS

PART #	DESCRIPTION
FRA487112	AN12 Female Weld Bung
FRA497104	AN4 Male Weld Bung
FRA497108	AN8 Male Weld Bung
FRA497120	AN20 Male Weld Bung
FRA499508	AN3 Female Weld Bung x .750 St
FRA596701	1/8" FPT Steel Weld Bung



SWIVEL REDUCERS

PART #	DESCRIPTION
FRA497204	AN4 Nut x AN3 Male Swivel Reducer
FRA497208	AN8 Nut x AN6 Male Swivel Reducer
FRA497210-BL	-10 Nut x -6 Male Swivel Reducer
FRA497211-BL	-10 Female to -8 Male
FRA497213	AN12 Nut x AN10 Male Swivel Reducer
FRA497219-BL	-20 Nut x 16 Male Swivel



FLARE EXPANDERS & PLUGS

PART #	DESCRIPTION
FRA480603	Aluminum Flare Plug AN3 - Blue
FRA480603-BL	-3 AN Plug Black
FRA480606	Aluminum Flare Plug AN6 - Blue
FRA497304	3 - 4 Flare Expander
FRA497308	6 - 8 Flare Expander
FRA497310	8 - 10 Flare Expander
FRA498005-BL	AN10 Female - Male Flare 45
FRA498006-BL	-12 Female - Male Flare 45 Black
FRA498101	AN3 Female - Male Flare 90
FRA498102	AN4 Female - Male Flare 90
FRA498103	AN6 Female - Male Flare 90
FRA498104	AN8 Female - Male Flare 90
FRA498104-BL	AN8 Female - Male Flare 90
FRA498105	AN10 Female - Male Flare 90
FRA498106-BL	-12 Female - Male Flare 90



SWIVELS

PART #	DESCRIPTION
FRA498202	AN4 T Female Swivel On Side
FRA498202-BL	-4 T Female Swivel on Side Black
FRA498301	AN3 T Female Swivel on Run
FRA498304-BL	-8 T Female Swivel on Run Black
FRA499208-BL	Fitting, -8 x 3/4"-16, 90deg. Swivel
FRA499210	AN10 x 7/8"-14, 10 90deg.
FRA499281-BL	-8 x 7/8"-14, 10 90deg. Swivel
FRA499303	AN3 Female Swivel to 1/8" MPT
FRA499303-BL	-3 Female Swivel to 1/8" MPT Black
FRA499308	AN8 Female Swivel to 3/8" MPT





STEEL ADAPTERS

PART #	DESCRIPTION
FRA582203	AN3 x 1/8" MPT 90 Adapter - Steel
FRA582204	AN4 x 1/8" MPT 90 Adapter - Steel
FRA582304	AN4 x 1/8" MPT 45 Adapter - Steel
FRA582403	AN3 Tee - Steel
FRA582504	AN4 Tee 1/8 MPT on Side - Steel
FRA582603	AN3 Tee 1/8 MPT on Run - Steel
FRA6004023	AN3 x 45 Degree Bent Crimp Fit
FRA6204023	45 Bent Tube Crimp Fitting
FRA650103	AN3 x 3/8" Banjo Adapter - Steel
FRA650150	3/8"-24 Banjo Bolt - Steel





TUBE ADAPTER, NUT & SLEEVE

PART #	DESCRIPTION
FRA481803	Aluminum Tube Nut AN3 - Blue
FRA481803-BL	-3 Tube Nut Black
FRA481903	Aluminum Tube Sleeve AN3 - Blue
FRA481903-BL	-3 Tube Sleeve Black
FRA650201	AN3 x 3/8"-24 I.F. Tubing Adapter
FRA650202	AN3 x 10 x 1.0 I.F.Tubing Adapter
FRA650204	AN3 x 7/16"-24 I.F. Tubing Adapter

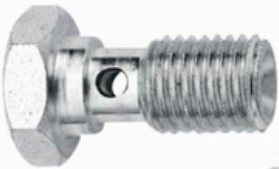



BRAKE ADAPTERS

PART #	DESCRIPTION
FRA650302	AN3 x 3/8"-24 I.F. Brake Adapter
FRA650303	AN3 x 7/16"-20 Brake Adapter
FRA650305	AN3 x 1/2"-20 I.F. Brake Adapter
FRA650306	AN3 x 9/16"-18 I.F. Brake Adapter
FRA650307	AN3 x 10 x 1.0mm Brake Adapter
FRA650407	AN4 x 10 x 1.0mm Adapter

Fragola
Performance Systems



CRUSH WASHERS

PART #	DESCRIPTION
FRA999204	AN8 Alum. Crush Washer AN-90
FRA999205	AN10 Alum. Crush Washer AN-90



CLAMPS

PART #	DESCRIPTION
FRA280006	AN6 EZ Clamp - Red
FRA280210	-10 EZ Clamp - Black
FRA999156	AN6 Clamp - Pair



SOCKET HEX PORT PLUGS

PART #	DESCRIPTION
FRA481306-BL	6 x 9/16"-18 Socket Hex Port Plug
FRA481308-BL	8 x 3/4"-16 Socket Hex Port Plug
FRA481312-BL	12 x 1-1/16"-12 Socket Hex Port Plug

Fragola
Performance Systems



PREMIUM NYLON BLACK RACING HOSES

- Recommended for Motorsports applications, the black synthetic rubber core is resistant to oil, fuels, coolants, and alcohols.
- 500 PSI working pressure covers most oil, water, and fuel systems you may encounter.
- Reinforced with a single braid of bright corrosion resistant type 302 stainless steel wire braid.
- Operating range of -40 degrees F to +300 F.
- Designed to be used with FPS Series 2000 Hose Ends, and FPS Sport-Crimp Hose Ends



PART #	DESCRIPTION
FRA840004	AN4 Premium Nylon Race Hose Black
FRA840006	AN6 Premium Nylon Race Hose Black
FRA840008	AN8 Premium Nylon Race Hose Black
FRA840010	AN10 Premium Nylon Race Hose Black
FRA840012	AN12 Premium Nylon Race Hose Black
FRA840016	AN16 Premium Nylon Race Hose Black





FUEL LINE KITS

PART #	DESCRIPTION
FRA920002	7/8"-20 Dual Inlet 4150 AN6 Fuel Line Kit
FRA920003-BL	7/8"-20 Dual Inlet 4150 AN8 Fuel Line Kit

MISCELLANEOUS

PART #	DESCRIPTION
FRA861006	3/8" Blue Push Locks 10
FRA900608	Flare to Flare Y-Fitting, 8AN Male All



ACCESS TO COMPLETE PRODUCT LINE AVAILABLE

MOROSO

SB CHEVY HD OIL PUMPS

Available separately or complete with pickups that have been welded to the pump body for a bolt-on installation. Choose the pump/pickup that matches the depth of the oil pan.



STANDARD VOLUME OIL PUMP

DESCRIPTION	OIL PUMP/PICKUP PART #	OIL PUMP ONLY PART#
8-1/4" Deep Pan, 5/8" Inlet	MO22124	MO22101

HIGH VOLUME OIL PUMP

DESCRIPTION	OIL PUMP/PICKUP PART #	OIL PUMP ONLY PART#
8-1/4" Deep Pan, 5/8" Inlet	MO22134	MO22111
7-1/2" Deep Pan, 5/8" Inlet	MO22144	MO22111
8-1/4" Deep Pan, 3/4" Inlet	MO22146	-
7-1/8" Deep Pan, 3/4" Inlet	MO22147	-

OIL PUMP DRIVESHAFT

Designed to replace mild steel OEM shafts, high quality steel units include a pinned steel sleeve for proper oil pump and shaft alignment.



PART #	DESCRIPTION
MO22070	SB Chevy, 5.75" Long
MO22077	SB Chevy Dart, .391" Raised Cam, 6.24" Long
MO22080	BB Chevy, (Exludes Gen V and VI)
MO22090	SB Chevy, when using BB Chevy Pump, 5.625" Long

OIL PUMP BLOCK-OFF PLATE

Bolt-on aluminum plate seals oil passage on rear main cap when dry sump is used. Requires no drilling or tapping for installation on small block Chevys.



PART #	DESCRIPTION
MO23790	Oil Pump Block-Off Plate

OIL RESTRICTOR KITS

Reduce flow to rocker arm assemblies, leaving more oil available for rod and main bearings. Power-robbing windage is reduced by lessening the volume of oil passing by the rotating assembly on its return to the pan. Do not use with hydraulic lifters.



PART #	DESCRIPTION
MO22010	SB and BB Chevys, .0625" Orifice Dia., Screws into Lifter Galley cleaning plug holes at back of block, 2 per package
MO22016	New GM Blocks w/Oil Lifter Galley Bosses, flush with bellhousing face, 2 per package
MO22018	Dart SHP SB Chevy
MO22045	SB Ford 302-351W, 7 per package

OIL RETURN SCREEN KITS

Screen retains debris in the lifter valley area and kit includes required amount of plugs to block the oil return holes in the lifter valley above the cam. The redirects the oil to the front and rear return galleries and then directly to the sump area, instead of dumping it on the crankshaft causing increased windage and lost horsepower.



PART #	DESCRIPTION
MO25000	SB Chevy
MO25026	Dart SHP SBC

RACING OIL FILTERS

- Rated at 27 microns
- Less pressure drop with more flow
- Less Oil bypass
- Maximum oil filtration

PART #	DESCRIPTION
MO22459	Chevy Short Style Oil Filter, 4-9/32" Tall
MO22460	Chevy Tall Style Oil Filter, 5-1/4" Tall
MO22465	Remote Mount, Replaces Fram HP6, 6-1/4" Tall
MO22470	Ford/Chrysler Tall Style Oil Filter, 5-1/4" Tall



MO22459

OIL BYPASS ELIMINATOR

Billet Aluminum adapter eliminates the bypass found in OEM Small Block Chevy filter adapters, preventing unfiltered oil from entering the engine. Adapter features a single inlet and accepts spin-on, stock type oil filters.

PART #	DESCRIPTION
MO23775	Oil Bypass Eliminator


MO23775



OIL FILTER ADAPTERS

Adapters lower filter 1-1/2" and accept accumulators, external or dry sump pumps, or remote oil coolers. Will fit Small Block Chevys without modification. Adapters use 1/2" NPT inlets and outlets. Includes instructions, mounting bolts and O-rings.

PART #	DESCRIPTION
MO23690	Adapter for Plumbing Accumulators and external or dry sump pumps
MO23692	Adapter for Plumbing Remote Oil Coolers


MO23690

OIL FILTER BLOCK-OFF PLATE

Often used on dry sump oil system installations, plate has a 1/2" NPT port for input pressure line and fits all Small and Big Block Chevy (except Gen. V/VI or those with bolt hole at center of pad).

PART #	DESCRIPTION
MO23840	Oil Filter Block-Off Plate


MO23840

MO22635



RACING VACUUM PUMP

PART #	DESCRIPTION
MO22640	Original 3-Vane Vacuum Pump for Wet Sump Oiling System



MO22640

RACING VACUUM ACCESSORIES

PART #	DESCRIPTION
MO22635	Positive Seal Vented Fitting, -12AN

SELF-CONTAINED OIL PREHEATER

Pre-heat 12 qts. of oil in 25 minutes using 400 watts of power. Self-contained, plug-in 110/120 unit is 4-3/4" from fitting to tip. Includes 1/2" -14NPT aluminum weld bung.

PART #	DESCRIPTION
MO23991	Self-Contained Oil Preheater


MO23991

MOROSO

EXTERNAL HEATING PADS

Pads adhere to oil tanks to preheat engine oil. Etched foil distributes heat evenly and silicone outer shell resists oil and dirt. Includes 18 AWG electrical cord with plug for 110 volt AC outlets.

PART #	DESCRIPTION
MO23995	6" x 12" 360 watt pad, Hook & Spring Attachment
MO23996	5" x 7" 400 watt self-adhesive pad, heats from 66° to 160°F in 25 min.
MO23997	2" x 15" Self Adhesive Pad, Perfect for narrow areas



MO23995


MO25050

LIFTER VALLEY OIL BAFFLE

Baffle increases horsepower by shielding bottom of intake manifold from hot oil. Also keeps surplus oil out of valve covers by eliminating oil splash. Maintains oil pressure during pushrod or rocker arm failure by keeping lifters in their bores. Fits SB Chevy and may have to be trimmed .060-.100" before snapping into place. Not to be used with roller lifters.

PART #	DESCRIPTION
MO25050	Lifter Valley Oil Baffle

CHROME PLATED VALVE COVERS

An economical alternative to high priced valve covers. Chrome covers offer superb fit and sealing. Tall covers clear most roller rockers and shaft rockers systems. Sold in pairs, complete with grommets.

PART #	DESCRIPTION
MO68102	Tall, Small Block Chevy 262-400
MO68103	Baffled, Tall, Small Block Chevy 262-400
MO68201	Baffled, Tall, Small Block Ford 289-351W
MO68202	Tall, Small Block Ford 289-351W



MO68102

MO68201

MO68026

FABRICATED ALUMINUM VALVE COVERS

Tall covers are extremely light, about 3 lbs. each and include fasteners.

PART #	DESCRIPTION
MO68026	Small Block Chevy, Centerbolt Style Cylinder Heads, Billet Rail, 2 Breather Tubes at Center of LH Cover
MO68325	Small Block Ford 221-351W Billet Rail
MO68326	Small Block Chevy 262-400, OEM and 18°, Billet Rail
MO68329	Small Block Chevy 262-400, OEM & 18° Billet Rail w/Valve Spring Oilers
MO68335	Small Block Chevy 262-400, OEM & 18° Rigid Rail
MO68338	Small Block Chevy 262-400, OEM & -12 Brodix, Billet Rail



MO68329



MO68401

DIE CAST ALUMINUM VALVE COVERS

Tall thin wall covers are about half the weight of standard cast versions. The casting process yields a blemish free surface with no porosity. Valve covers are hand polished and sold in pairs with studs and grommets.

PART #	DESCRIPTION
MO68385	Small Block Chevy 262-400, Tall w/Crossover Breather Tube Kit
MO68401	Small Block Chevy 262-400, Tall w/Moroso Logo
MO68405	Small Block Chevy 262-400, Tall w/o Logo
MO68450	Small Block Ford 289-351W, Smooth Extra Tall w/o Logo

WITH WELDED BREATHER TUBES

PART #	DESCRIPTION
MO63365	Small Block Chevy 262-400, Tall, 2 Breather Tubes at front of LH Cover, w/ Moroso Logo. Breathers included
MO68370	Small Block Chevy 262-400, Tall 2 Breather tubes at Center of 1 cover w/ Moroso Logo. Breathers Included
MO68374	Small Block Chevy 262-400, Smooth, Tall, 2 Breather tubes at center of 1 cover w/o logo. Breathers included



PERM-ALIGN VALVE COVER GASKETS

Durable gaskets won't leak, blow out or get sucked in. Gaskets are 3/16" thick and made of 40 durometer rubber, vulcanized to a rigid steel frame to provide years of dependable service. Two per package.

PART #	DESCRIPTION
MO93020	SB Chevy
MO93021	SB Chevy w/12°, 13.5°, 15°, 16°, 18°, Brodix, Dart, Edelbrock, All-Pro Heads
MO93060	Ford 302/351W



MO68800-100

WELD-IN FILTERED BREATHER KIT

Designed for use with aluminum valve covers, kit includes tow internally baffled breather tubes which must be welded to valve covers.

PART #	DESCRIPTION
MO68800-100	Weld-In Filtered Breather Kit



MO85400

NEW! BREATHER TANKS

Lightweight, black polyethylene tanks are well suited for use as engine, transmission or rear end breather tanks. Tanks are 3-1/8" diameter x 10-1/2" tall (with breather) and include 2" tall, clamp-on breather. Offered with -8AN or -12AN fitting.

PART #	DESCRIPTION
MO85400	Breather Tank, -12AN Fitting
MO85404	Breather Tank, -8AN Fitting



MO64929

THROTTLE RETURN SPRING KITS

Carburetor or manifold mount kits in chrome or black E-coating, assure positive throttle return and satisfy requirements of most sanctioning bodies.

PART #	DESCRIPTION
MO64919	Carburetor Mont Throttle Return Kit, Holley 4150/4160, Black
MO64925	Manifold Mount Throttle Return Kit, SB Chevy, 1-13/16" Tall, Chrome
MO64927	Carburetor Mount Throttle Return Kit, Holley 2300/4150/4160, Chrome
MO64929	Throttle Return Springs (2) Only, Stainless



MO64919

FUEL PUMP BLOCK-OFF PLATES

Block the fuel pump boss when mechanical fuel pump is not used. Available in anodized aluminum, chrome plated steel and black anodized billet aluminum finishes.

DESCRIPTION	BLACK ANODIZED ALUMINUM	CHROME PLATED STEEL	BLACK ANODIZED BILLET ALUMINUM
Small Block Chevy	MO65391	MO65393	MO65395
Ford (Exc. 351C, 351M-400)	MO65392	-	MO65396



Fuel Pump Block-Off Plates

BLUE MAX SPIRAL CORE SPARK PLUG WIRE SETS

Independent testing confirmed that Blue Max spark plug wire sets have more spark energy, better EMI suppression and higher dielectric strength than any other wires. Spiral core wire sets are compatible with modern on-board electronics. Available in universal and custom fit sets with wire sleeving. Distributor end of universal sets must be cut to proper length and have the boots and terminals installed.



UNIVERSAL WIRE SETS (HEI/NON HEI)

PART #	DESCRIPTION
MO73225	Blue, 90° Spark Plug Boots/Terminals
MO73217	Yellow, 90° Spark Plug Boots/Terminals
MO73219	Red, 90° Spark Plug Boots/Terminals
MO73231	Black, 90° Spark Plug Boots/Terminals
MO73226	Blue, Straight Spark Plug Boots/Terminals
MO73218	Red, Straight Spark Plug Boots/Terminals
MO73232	Black, Straight Spark Plug Boots/Terminals
MO73220	Blue, 135° Spark Plug Boots/Terminals
MO73233	Black, 135° Spark Plug Boots/Terminals

UNIVERSAL WIRE SETS (HEI/NON HEI)

PART #	DESCRIPTION
MO72402	SB Chevy w/ HEI, over Valve Cover, 90° Plug Terminal
MO72405	SB Chevy under Header, Non-HEI, 90° Plug Terminal
MO72407	SB Chevy under Header, HEI, 90° Plug Terminals

BLUE MAX SOLID CORE SPARK PLUG WIRE SET

Stainless steel, solid core 8mm wires work with magnetos and other systems that do not require (EMI) suppression wires. Universal fit, with only spark plug end installed. Sets include distributor boots (HEI and Non-HEI) and 36" coil wire.



PART #	DESCRIPTION
MO72800	SB Chevy w/Straight Ends
MO72820	SB Chevy w/90° Ends

BLUE MAX SPIRAL CORE COIL PLUG WIRE SET

Coil wires should be replaced regularly. Kit includes 3' Blue Max spiral core 8mm suppression wire, wire stripping tool and 13-piece boot and terminal kit.

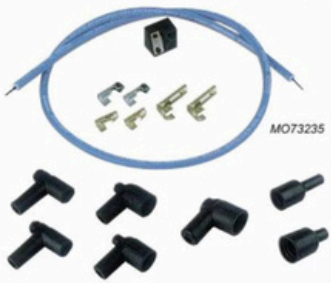

PART #	DESCRIPTION
MO73235	Blue Max Spiral Core Coil Plug Wire Set

INSULATED WIRE SLEEVE

Extend spark plug wire life and insulate against exhaust header heat. For best results, the sleeve should cover the entire wire from plug boot to distributor boot and then be sealed with MO72030 or MO72031 Shrink Sleeve. Packaged in 25' lengths.



PART #	DESCRIPTION
MO72000	7-8mm, Blue
MO72002	7-8mm, Red
MO72011	Ultra 40, Blue

SHRINK SLEEVE

Completely seal spark plug and distributor boots and spark plug wire sleeve. Packaged 18 sleeves per set.



PART #	DESCRIPTION
MO72030	Blue
MO72031	Black

MOROSO

UNIVERSAL WATER PUMP PULLEY SHIM KIT

Shims install between the water pump pulley and the drive flange to properly align belt drive. The kit contains two 1/16" and one 1/8" spacers. Fits all GM and Ford water pumps with either 3/4" or 5/8" shaft.

PART #	DESCRIPTION
MO64035	Universal Water Pump Pulley Shim Kit



MO64035

WATER OUTLET RESTRICTOR KIT

Fits all GM V-8's, and Small Block Fords. Anodized aluminum restrictor plates mount under the water outlet on the intake manifold. By reducing the outlet flow, water absorbs more heat for improved cooling. Kit consists of three plates with 5/8", 3/4" and 1" I.D. holes (2-1/8" O.D.).

PART #	DESCRIPTION
MO63440	Water Outlet Restrictor Kit



MO63440

CHEVY SOLID STEEL MOTOR MOUNTS

Replace stock rubber mounts. Prevent torque loss and binding linkages caused by engine movement. Mounts eliminate torque straps or chains. Mounts have a protective zinc finish. Sold individually.

PART #	DESCRIPTION	DIMENSIONS "A"	DIMENSIONS "B"
MO62500	Replaces OEM 3990914, .250" thick	1-11/16"	2-1/2"
MO62510	Replaces OEM 3962748, .188" thick	2-1/8"	2-3/8"
MO62515	Replaces OEM 332648, .188" thick	2-9/32"	2-3/8"
MO62530	Replaces OEM 6258154, .188" thick	1-3/4"	2-5/8"



MO62500

EXTRA LONG BELLHOUSING DOWEL PINS

Pins simplify the installation of the bellhousing on the engine block. Available in standard and offset configurations, pins help properly align the transmission input shaft to the pilot bearing. Packaged two per card.

PART #	DESCRIPTION
MO37932	Standard GM V-8



MO37932

ULTRA 40 RACE SPARK PLUG WIRE SETS

One of the most powerful, RFI/EMI-proof spark plug wire sets available, with just 40 ohms of resistance per foot. Kevlar core is four times stronger than conventional Aramid fiber cores. Available in universal or custom sets. Custom fit wire sets include Ultra 40 insulated wire sleeve. Choose from blue or black wire sets.

UNIVERSAL WIRE SETS

DESCRIPTION	BLUE WIRE SET PART #	BLACK WIRE SET PART #
90° Universal Wire Set	MO73800	MO73814
Straight Universal Wire Set	MO73801	MO73815
135° Universal Wire Set	MO73802	MO73816

CUSTOM WIRE SETS

DESCRIPTION	BLUE WIRE SET PART #	BLACK WIRE SET PART #
SBC Under Valve Covers, 90° Plug, HEI, Front of Motor Routing	MO27001	-
SBC over Valve Covers, 90° Plug, Non-HEI	MO73600	-
SBC Over Valve Covers, 90° Plug, HEI	MO73602	MO73817
SBC Under Headers, 90° Plug, Non-HEI	MO73605	-
SBC Under Headers, 90° Plug, HEI	MO73607	MO73818
Ford 351W, 135° Plug, HEI	MO73626	MO73822

MOROSO

NUMBERED SHRINK SLEEVES

Sleeves simplify spark plug wire identification and installation. Numbered from 1 through 8, sets include two of each number to identify both ends of the spark plug wires.

PART #	DESCRIPTION
MO72020	Numbered Shrink Sleeves



MO72020

HIGH TEMP SPARK PLUG BOOT SLEEVES

Non-flammable sleeves provide protection up to 1,200°F. Sleeves are 1" I.D. x 5-3/4" long and sold in two-packs.

PART #	DESCRIPTION
MO71992	Blue
MO71993	Red
MO71994	Black
MO71995	Natural



High Temp Spark Plug Boot Sleeves

SPARK PLUG WIRE SEPARATOR KITS

Separators accommodate 7 to 9mm wires, with or without sleeves. Plastic separators prevent crossfiring and can be used over valve covers or under headers. Easily snap into place to hold wires securely. Packaged six to a card (2 each of 2, 3, & 4-hole separators).

PART #	DESCRIPTION
MO72160	Blue
MO72161	Red
MO72162	Yellow
MO72163	Black

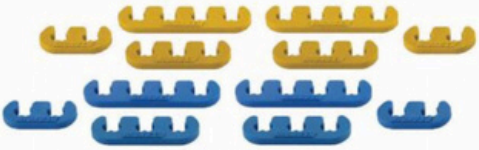

Spark Plug Wire Separator Kits

DISTRIBUTOR HOUSING SHIM KIT

Prevent oil pump bind and distributor spark scatter in engines with resurfaced heads or decks. High impact nylon shims fit all Chevy V-8's. Three-packs include one each of .030", .060", and .100" shims.

PART #	DESCRIPTION
MO26150	Distributor Housing Shim Kit

DISTRIBUTOR GEAR SHIM KIT

For distributors with 1/2" diameter shaft. Includes two .010" shims, two .020" shims, and one .053" shim for precise distributor shaft end play adjustment. Improve timing accuracy and prevent gear wear.

PART #	DESCRIPTION
MO26140	Distributor Gear Shim Kit



MO26140

DISTRIBUTOR HOLD DOWN CLAMP

Heavy duty, secure clamp mounts on stud to eliminate thread wear. Slotted for quick distributor removal.

PART #	DESCRIPTION
MO26200	Small Block Chevy 262-400, Gold Iridite Finish
MO26210	Small Block Chevy 262-400, Chrome Plated
MO26211	Small Block Ford 221-351W, Chrome Plated



Distributor Hold Down Clamps

SPARK PLUG INDEXING WASHERS

For use on all 14mm spark plugs with 5/8" hex. Use with Indexer MO62160. There are three thicknesses in each package, one of which will correct the electrode placement on any plug, simplifying the time-consuming task of spark plug indexing. Washers are stamped from copper for perfect sealing and heat transfer. Thirty to a card.

PART #	DESCRIPTION
MO71900	Taper Seat, .010", .021", .032"
MO71910	Flat Seat, .040", .050", .064"



MO71900

SPARK PLUG INDEXER

Modern, high-compression racing engines require indexing of spark plugs to prevent contact between piston dome and the plug's electrode, and for optimum direction of spark travel within combustion chamber. Designed for both flat and taper-seat 14mm spark plugs. Black-anodized so that marks can be placed on the outer surface for checking subsequent sets of plugs.

PART #	DESCRIPTION
MO62160	Spark Plug Indexer



MO62160

DEGREE WHEELS

Heavy gauge degree wheels measure camshaft centerline, valve timing, TDC, and BDC. All functions are marked in easily read 1° increments. Adapters to fit most engines are included.

PART #	DESCRIPTION
MO62190	11" Diameter Degree Wheel, for In-Car or Engine Stand Usage
MO62191	18" Diameter Degree Wheel, Engine Stand Usage

Degree Wheels

STUD MOUNT VALVE SPRING COMPRESSORS

Valve spring changing is greatly simplified with the Moroso Stud Mount Tool which will fit both 3/8" and 7/16" rocker studs. The 12" handle is much stronger and provides ample leverage to overcome the resistance of extremely high pressure valve springs.

PART #	DESCRIPTION
MO62370	Stud Mount Valve Spring Compressor



MO62370

VALVE SEAT PRESSURE TESTERS

The most accurate way to monitor valve seat pressure on an assembled engine. Compatible with most aftermarket aluminum, OEM steel rockers, and shaft mounted rocker arms. Includes interchangeable front claws to fit most aftermarket aluminum rocker arms.

PART #	DESCRIPTION
MO62388	Valve Seat Pressure Tester, Interchangeable Front Claws to Fit Most Rockers, 160-400 PSI
MO62390	Valve Seat Pressure Tester, 100-300 PSI
MO62391	Valve Seat Pressure Tester, Low Profile Design, 160-400 PSI



MO62388

CERAMIC ENGINE SEAL

The best chemical sealer money can buy. Has saved the day for many an oval track racer. Can also be used in tow vehicles or street applications. If this won't seal it, it will have to be welded. Not for use with anti-freeze.

PART #	DESCRIPTION
MO35500	Ceramic Engine Seal



MO35500

A & B EXPOXY

Easy-to-use epoxy is typically used to install oil return screen kits or repair engine blocks, cylinder head intake ports and intake manifolds. Adheres to any clean surface and has a maximum use temperature of 250°F.

PART #	DESCRIPTION
MO35560	A & B Expoxy



MO35560

ACCESS TO COMPLETE PRODUCT LINE AVAILABLE

DENSO STYLE RACE PREPPED RACE ALTERNATORS

- True one wire hookup
- 12 Volt, 16 Volt, and XS Volt
- Great output to weight ratios
- Our smallest and lightest!
- Only 5.75 lbs w/o pulley

POWERMASTER Performance
STARTERS & ALTERNATORS

RACING ALTERNATORS

PART #	DESCRIPTION
PM8132	Natural Racing Alternator-Denso
PM8142	Natural Racing Alternator-Denso
PM8162	Racing Alternator - Mini Denso
PM8162-UNM	50A One Wire Mini Denso
PM8172	Racing Alternator - Mini Denso
PM8182	Racing Alternator - Mini Denso
PM8166	Racing Alternator - Mini Denso



THE INFICLOCK SYSTEM

- InfiCLOCK Design for 360 degree rotation
- The lightest 200 ft. lb. starter available
- Clears most oil pans and headers
- No heat soak or hot start problems
- Machined aluminum adapter block
- Adjustable mounting block on most

STARTERS

PART #	DESCRIPTION
PM9400	Natural Ultratorque Starter, G
PM9500	XS Torque Starter for Chevy 16
PM9502	XS Torque Starter for Chevy 15
PM9503	XS Torque Starter for Ford 289
PM9514	XS Torque Starter for Bert/Brinn
PM9600	Mastertorque Starter Chevy 168
PM9100	Natural PowerMAX Starter 160
PM9439	Starter 9Tooth 10Pitch
PM9503X	Demo Starter - Ford





PM181 ALTERNATOR PULLEY

- Single Groove V-Belt
- 2.8" Diameter
- Black

PULLEYS

PART #	DESCRIPTION
PM181	3" Deep V-Belt Billet Aluminum Alternator Pulley
PM182	4" Deep V-Belt Billet Aluminum Alternator Pulley

BRACKETS

PART #	DESCRIPTION
PM722	Bracket - High Mount for 8072







ACCESS TO COMPLETE PRODUCT LINE AVAILABLE

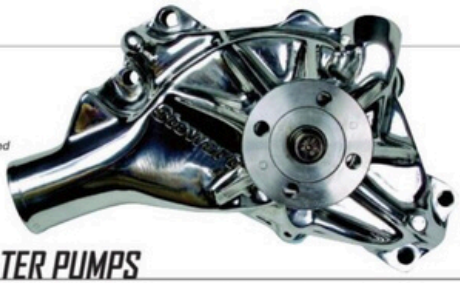

Polished

EMP Stewart COMPONENTS

STAGE 1 WATER PUMPS

Pumps appear stock externally and may be used with stock lines and brackets. The Stage 1 has a precisely machined fan hub for perfect pulley alignment, high flow impeller, special water/anti-freeze compatible seal assembly. Some Stage 1 models are available with a ¾" ball/roller bearing.

STAGE 2 WATER PUMPS

This water pump features 356-T6 heat-treated, ribbed aluminum castings, extra-rigid cam stops with exclusive 5/8" or ¾" ball/roller bearings, maximum-flow, close-tolerance nodular iron impellers, machined fan hubs with dual bolt patterns, and water/anti-freeze compatible seal assemblies.

STAGE 3 WATER PUMPS

Stage 3 pumps have precisely machined ½" steel billet fan hubs for perfect pulley alignment, and exclusive features like 356-T6 heat treated cast aluminum housings with added ribs in snout for maximum strength. ¾" ball/roller bearings with 5 times the load carrying capacity of standard double ball bearings. Dual bolt pattern fan hubs have set screws for positive positioning, and extra-rigid cam stops. These pumps use maximum-flow, close-tolerance nodular iron impellers for reduced cavitation and have auxiliary water inlets and 12-point mounting bolts with chrome moly washers. Seals are water/anti-freeze compatible.

STAGE 3 WATER PUMPS

Stage 4 pump incorporates all-new DRV-8 series 8-Vane CNC-machined 6061-T6 billet aluminum impellers and flows up to 41% more water at twice the pressure of traditional units, assuring equal flow to left and right cylinder heads while consuming less horsepower.

CHEVROLET

STAGE 1

PART #	DESCRIPTION	LENGTH	BEARING	SHAFT	INFO
SC11104	BBC Short	5.750"	3/4"	5/8"	-
SC11113	BBC Long	7.287"	3/4"	5/8"	V-Belt 69-96
SC12103	SBC Short	5.625"	3/4"	5/8"	-
SC12203	SBC Short	5.625"	3/4"	3/4"	-
SC13103	SBC Short	5.795"	3/4"	3/4"	Corvette
SC13403	SBC Short	5.795"	3/4"	3/4"	Corvette; OEM Casting
SC13113	SBC Long	6.932"	3/4"	5/8"	-
SC15113	SB Chrysler	5.547"	3/4"	3/4"	Severe Duty; Chevy/Ford Style Hub

STAGE 2

PART #	DESCRIPTION	LENGTH	BEARING	SHAFT	INFO
SC21104	BBC Short	5.750"	3/4"	5/8"	-
SC21113	BBC Long	7.287"	3/4"	5/8"	-
SC21113-HP	BBC Long	7.287"	3/4"	5/8"	Polished
SC21204	BBC Short	5.750"	3/4"	3/4"	Corvette
SC22103	SBC Short	5.625"	3/4"	5/8"	-
SC22203	SBC Short	5.625"	3/4"	3/4"	-
SC23103	SBC Short	5.795"	3/4"	3/4"	Corvette
SC23113	SBC Long	6.932"	3/4"	5/8"	-

STAGE 3

PART #	DESCRIPTION	LENGTH	BEARING	SHAFT	INFO
SC31203	BBC Short	5.750"	3/4"	3/4"	Severe Duty
SC32200	SBC Short	5.625"	3/4"	3/4"	Adj. Mounting Holes
SC32203	SBC Short	5.625"	3/4"	3/4"	-
SC33100	SBC Short	5.795"	3/4"	3/4"	Adj. Mounting Holes
SC33103	SBC Short	5.795"	3/4"	3/4"	-
SC33143	SBC Short	5.795"	3/4"	3/4"	-

STAGE 4

PART #	DESCRIPTION	LENGTH	BEARING	SHAFT	INFO
SC41203	BBC Short	5.750"	3/4"	3/4"	Corvette
SC42200	SBC Short	5.625"	3/4"	3/4"	Adj. Mounting Holes
SC42203	SBC Short	5.625"	3/4"	3/4"	-
SC43100	SBC Short	5.795"	3/4"	3/4"	Adj. Mounting Holes
SC43103	SBC Short	5.795"	3/4"	3/4"	-
SC43143	SBC Short	5.795"	3/4"	3/4"	-
SC43143-CCW	SBC Short	5.795"	3/4"	3/4"	Reverse Rotation


SC22103


SC32200


SC23113

EMP Stewart COMPONENTS

FORD

STAGE 1

PART #	DESCRIPTION	LENGTH	BEARING	SHAFT	INFO
SC16103	SBF Alum w/o Cvr	5.090"	5/8"	5/8"	Pass. Side Inlet
SC16113	Ford 289-351W	5.700"	3/4"	5/8"	-
SC16133	Ford 289-351W	5.734"	3/4"	5/8"	Aluminum, Driver Side Inlet
SC16163	BBF 429-460	5.484"	3/4"	3/4"	Aluminum
SC16183	SBF 289-351W	4.070"	3/4"	5/8"	Rev. Rotation, Driver Side Inlet



STAGE 3

PART #	DESCRIPTION	LENGTH	BEARING	SHAFT	INFO	
SC36113	SBF SVO	221-351W	5.700"	3/4"	3/4"	-
SC46113-CCW	SBF SVO	221-351W	5.700"	3/4"	3/4"	Rev. Rotation

STAGE 4

PART #	DESCRIPTION	LENGTH	BEARING	SHAFT	INFO	
SC46113	SBF SVO	221-351W	5.700"	3/4"	3/4"	-
SC46114	SBF SVO	Short	5.450"	3/4"	3/4"	-


SC16113

BMW

PART #	CHASSIS CODE	ENGINE CODE
SCSTE30330	E34, E36, E46	WM50, WM52, WM54, S50, S52

MARINE

PART #	DESCRIPTION	BEARING	SHAFT	INFO
SC13106	SBC Short	3/4"	5/8"	Mercruiser Marine


SC16163

ELECTRIC WATER PUMP & ACCESSORIES

PART #	DESCRIPTION
SC-E5526	Electric Water Pump (Motor Only) No Inlet or Outlet
SC79-P	Electric Water Pump Polished
SC79-R-20-16	Electric #20 Inlet, #16 Outlet
SC5506AN16	#16 Outlet, fits Electric, Water Pump, Red Anodized
SC5506AN20	#20 Outlet, fits Electric, Water Pump, Red Anodized
SCRLY351	Relay Kit fits Electric, Water Pump
SC79-BK	Water Pump Electric, Black Anodized
SC79-R-20-20	Water Pump Electric, #20 Inlet, #20


SCSTE5003


Wiring Harness for Electric Water Pump

CARTRIDGE STYLE PUMPS & COMPONENTS

PART #	DESCRIPTION
SCSEA434445	Water Pump Pro Series Dodge R-5 Block
SCSEH434445	WP (Replacement Cartridge) for Dodge
SCSTE50003	WP (Replacement Cartridge) for Pro Series GM SB-2
SCSTE50005	GM SB2 NASCAR Pump
SCSTE14000	Ford SVO Cartridge Style

MISCELLANEOUS

PART #	DESCRIPTION
SC04595	Seal for 46114 Water Pump
SC801	Suspension Pump 1.75" Dia.
SC46113-I	Impeller for SC46113
SC46114-B	Bearings/fits SC46114
SC600130S	Hub Only for 3/4" Shaft 1/2" Billet Hub w/Set Screw
SCWHO4	4' Wiring Harness for Electric Water Pump
SCWHO6	6' Wiring Harness for Electric Water Pump
SCWHO8	8' Wiring Harness for Electric Water Pump

ACCESS TO COMPLETE PRODUCT LINE AVAILABLE

POWER STEERING PUMPS

Each Sweet pump is tested to ensure correct flow and pressure! The 1,300 PSI pumps are ideal for most race cars with the aluminum pumps weighing 3-3/4lbs., approximately 1 lb. lighter than steel models.

PART #	DESCRIPTION
SWT305-60330	Aluminum Pump Only, 1,300 PSI
SWT305-60331	Aluminum Pump w/Sweet 6" Dia. Pulley, 1,300 PSI
SWT305-60334	Aluminum Pump w/3/8" Hex Drive, 1,300 PSI
SWT305-70331	Steel Pump w/Sweet 6" Dia. Pulley, 1,300 PSI
SWT305-70330	Steel Pump Only, 1,300 PSI
SWT305-70350	Steel IMCA Pump Only, 1,300 PSI
SWT305-70351	Steel IMCA Pump w/Sweet 6" Dia. Pulley, 1,300 PSI
SWT301-30020	Aluminum 6" Dia. Sweet Pulley, 7/16" Wide



SWT305-60331



SWT301-30050

POWER STEERING TANKS

PART #	DESCRIPTION
SWT301-30050	Short Style (5") Tank w/Bracket
SWT301-30052	Clamp-On Tank Bracket Only
SWT301-30071	Long Style Tank w/Bracket
SWT301-30072	Long Style (7") Tank Only
SWT301-30094	Tank Cap Only

POWER STEERING PUMP KITS

NEW! All in one Power Steering Kit includes choice of steel or aluminum power steering pump with 6" V-belt pulley, 5" tank & tank mounting bracket. Kit features popular Delphi pumps that deliver up to 1,300 PSI. Kits are offered for Small Block Chevy in cylinder head or block mount versions. Sold complete with mounting hardware.

HEAD MOUNT #	BLOCK MOUNT #	DESCRIPTION
SWT305-60345	SWT305-60349	Aluminum Power Steering Pump Kit
SWT305-70345	SWT305-70349	Steel Power Steering Pump Kit

POWER STEERING FLUID

PART #	DESCRIPTION
SWT301-30090	Power Steering Fluid (Available by the Quart)

TANDEM POWER STEERING PUMP W/MECHANICAL FUEL PUMP DRIVE

Designed specifically for race cars using a Bert/Brinn style bell housing and flywheel. The Tandem Drive Aluminum Power Steering Pump features a special adapter and cam lobe style fuel pump drive that can be used to drive any Small Block Chevy mechanical fuel pump. The pump is sold complet with 33-tooth HTD pulley, pulley guides & all required hardware. The following components must be purchased separately: Pump mount, bell-housing, fuel pump and phenolic spacer.

PART #	DESCRIPTION
SWT305-85839	Tandem Power Steering Pump
SWT308-10100	SB Chevy Mechanical Fuel Pump w/Aluminum Clamp
SWT325-30044	Bell-Housing Pump Mount w/Fuel Pump Adapter
SWT325-30059	Phenolic Spacer for Fuel Pump

SWEET Mfg. INC
"LET US TURN YOUR WHEELS"

POWER STEERING PUMP W/FUEL PUMP ADAPTER

NEW! Aluminum power steering pump features a 3/8" hex drive on the front and a 3/8" female hex drive on the back plate for a fuel pump. Fuel pump must be purchased separately.

PART #	DESCRIPTION
SWT305-85834	Power Steering Pump w/Fuel Pump Adapter
SWT325-30040	Power Steering Pump to Dry Sump Pump Adapter
SWT325-30042	Fuel Pump Adapter w/Bolts
SWT325-30043	Phenolic Spacer

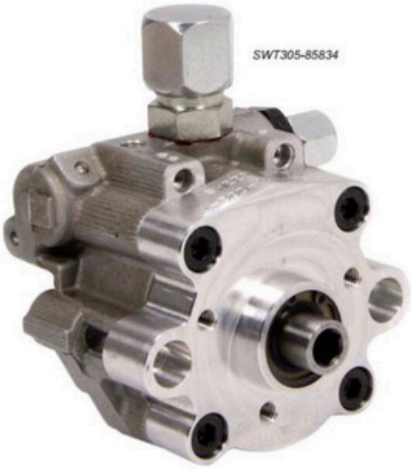

SWT305-85834

DRY SUMP MOUNT POWER STEERING PUMP

PART #	DESCRIPTION
SWT301-30055	Dry Sump Mount Power Steering Pump

Aluminum (Delphi) PTO pump use an extra-long 3/8" hex for complete engagement. Fits most dry sump pumps.

PART #	DESCRIPTION
SWT305-60334	Replacement Power Steering Pump
SWT325-30057	Adapter Kit Only
SWT325-30058	SCP Adapter
SWT325-30059	Phenolic Spacer
SWT325-30060	3/8"-24 Hex Drive, Pump Shaft

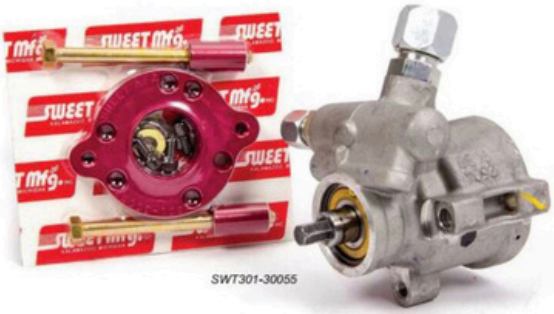

SWT301-30055

BELL-HOUSING POWER STEERING PUMP

PART #	DESCRIPTION
SWT305-60339	Bell-Housing Power Steering Pump

Aluminum 1,300 PSI pump works with Bert or Brinn transmissions. An HTD pulley is included, but mounting bracket must be purchased separately.

PART #	DESCRIPTION
SWT301-30043	33-Tooth HTD Pulley w/guides
SWT325-30041	Mounting Bracket & Hardware for SWT305-60239



SWT325-30041

ACCESS TO COMPLETE PRODUCT LINE AVAILABLE